PLASPER
AMBALAJ

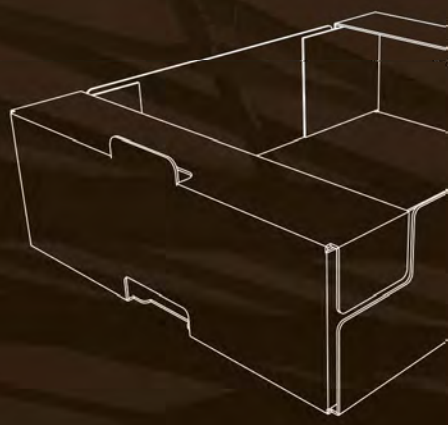

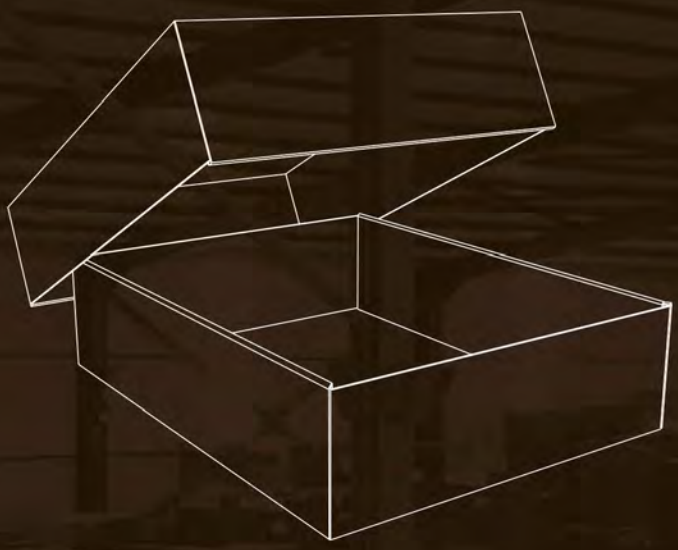

PRODUCT CATALOG
ÜRÜN KATALOĞU

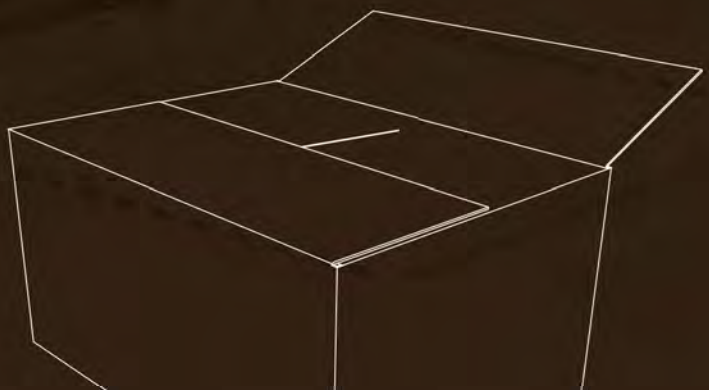

CONTENT (İÇERİK)

0200
Slotted boxes / Katmanlı tip kutular 3

0300
Telescopic boxes / Teleskopik tip kutular 18

0400
Folder boxes and trays / Dosya tipi kutular 29

0500
Slide boxes / Slide tipi kutular 62

0600
Rigid boxes / Sert-dikişli tip kutular 68

0700
Ready-glued cases / Özel kesim kutular 74

0800
Retail and e-commerce packaging / Perakende ve e-ticaret kutuları 91

0900
Interior fitments / Separatörler 111

SLOTTED BOXES
(Katmanlı Tip Kutular)

EN - Slotted boxes consist of basically one piece with a glued, stitched or taped manufacturers joint and top and bottom flaps. They are shipped flat, ready to use and require closing using the flaps provided.

TR - Katmanlı tip kutular temel olarak yapıştırılmış, dikilmiş tek parçadan oluşur. A-Box, yarım kapak A-Box, tam kapak kutular bu türdeki kutlara örnektir.

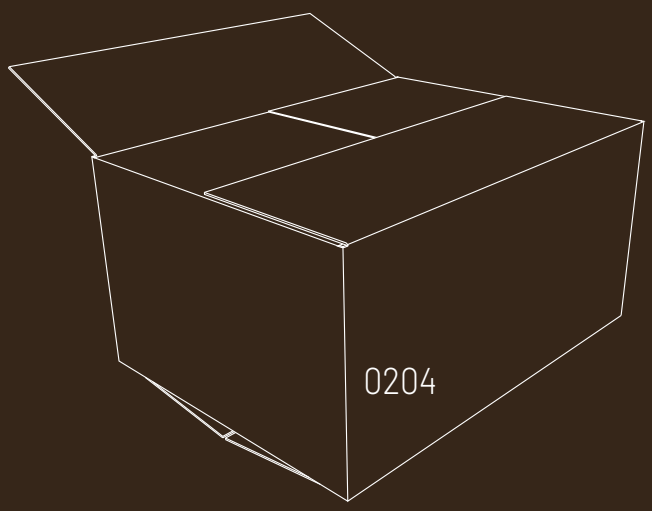

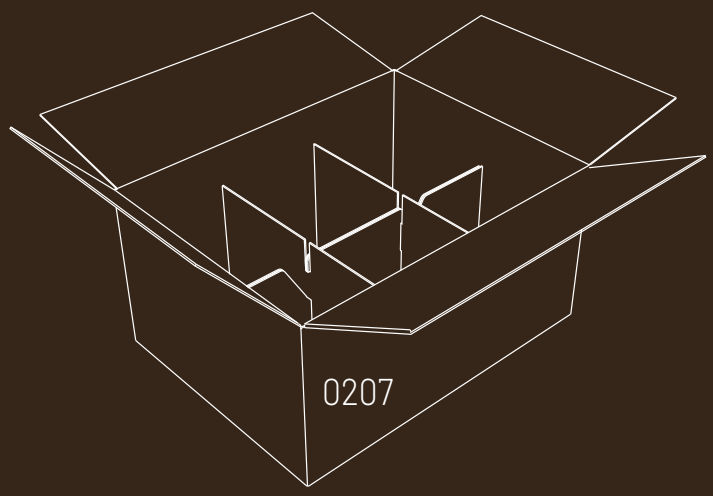

0200 M/A

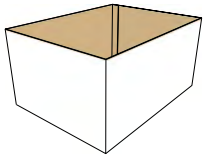

0201 M/A

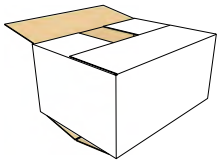

0202 M/A

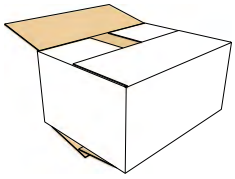

0203 M/A

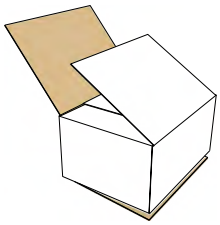

0204 M/A

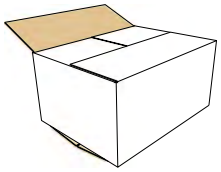

0205 M/A

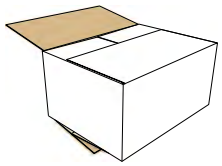

0206 M/A

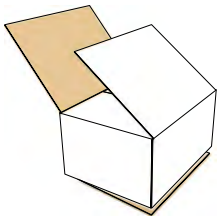

0207 M

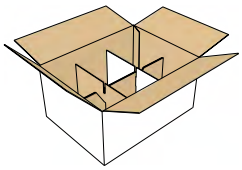

0208 M

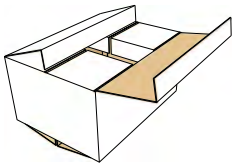

0209 M/A

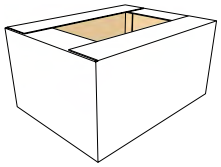

0210 M

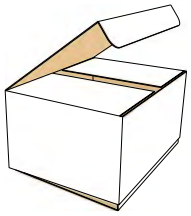

0211 M

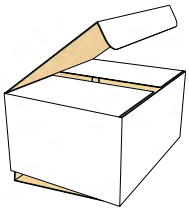

0212 M/A

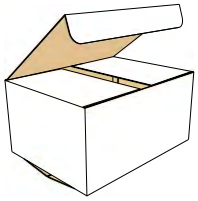

0214 M

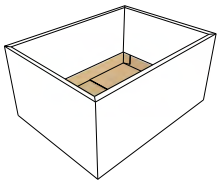

0215 M

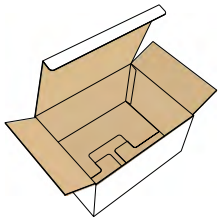

0216 M

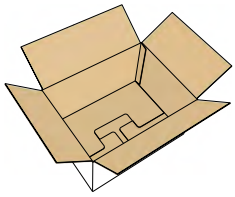

0217 M

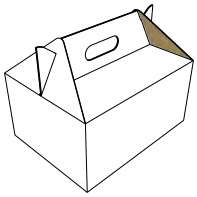

0218 M

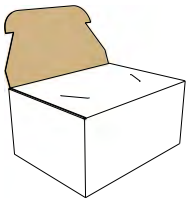

0219 M
NEW

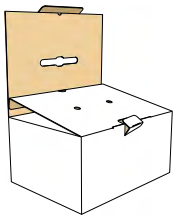

0220 M
NEW

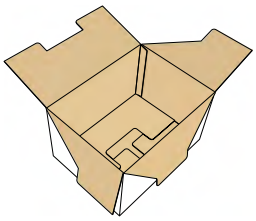

0221 M
NEW

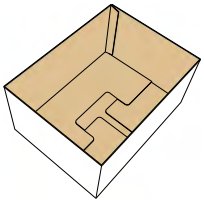

0222 M
NEW

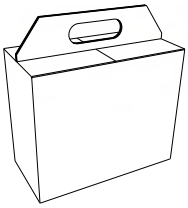

0225 M

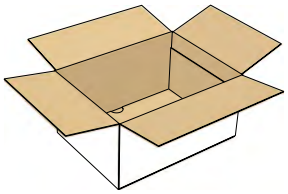

0226 M

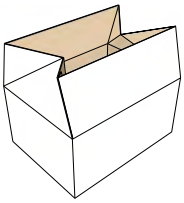

0227 M

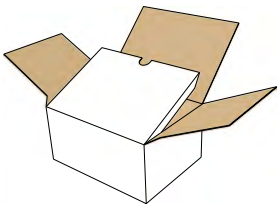

0228 M/A

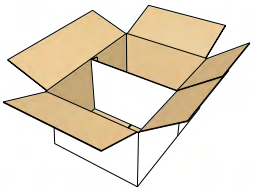

0229 M

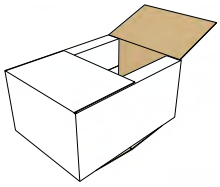

0229.1 M
NEW

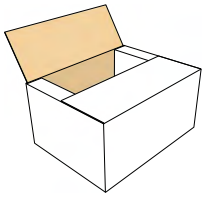

0230 M/A

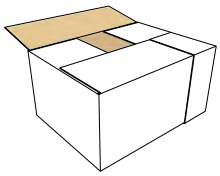

0231 M/A

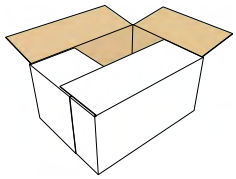

0232 M

NEW

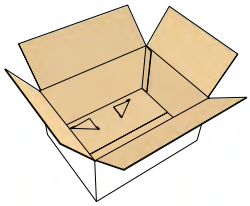

0233 M

NEW

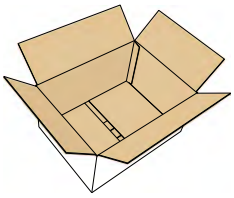

0233.1 M

NEW

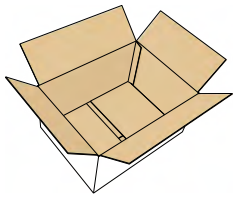

0240 M

NEW

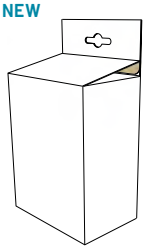

0241 M

NEW

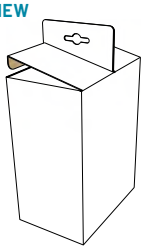

0242 M

NEW

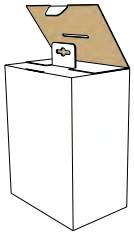

0200 M/A

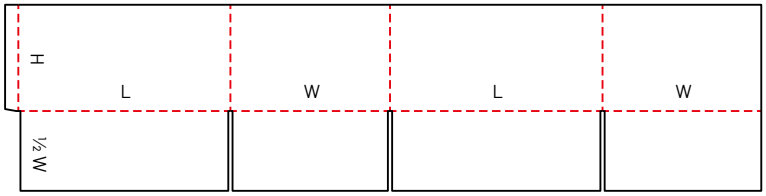

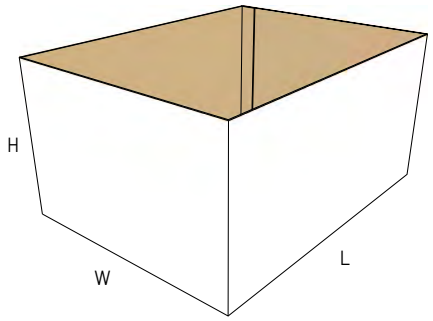

0201 M/A

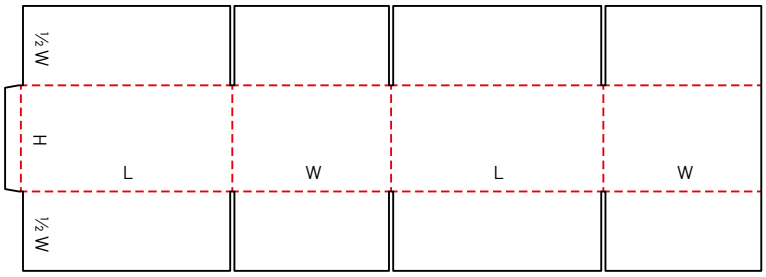

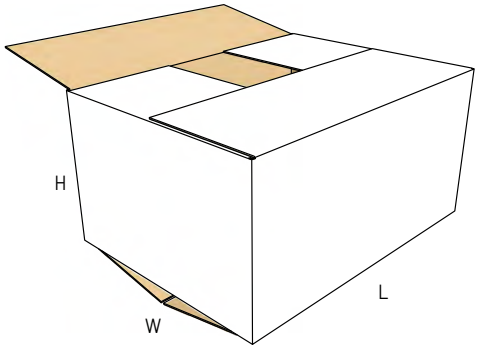

0202 M/A

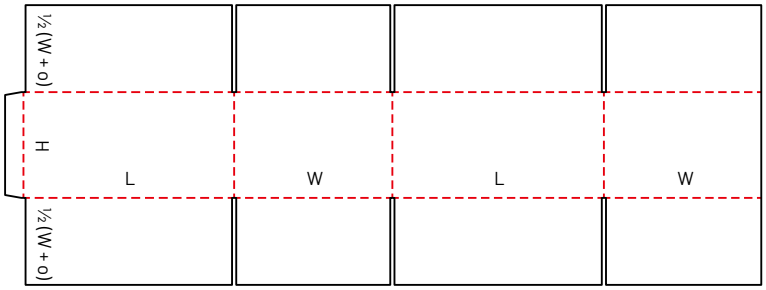

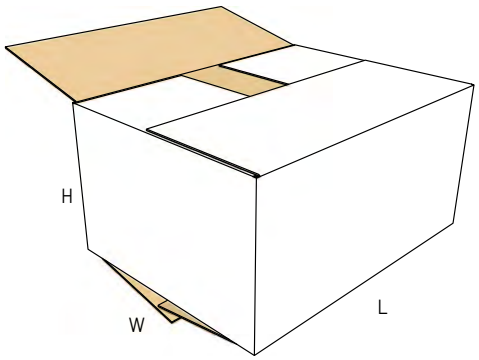

0203 M/A

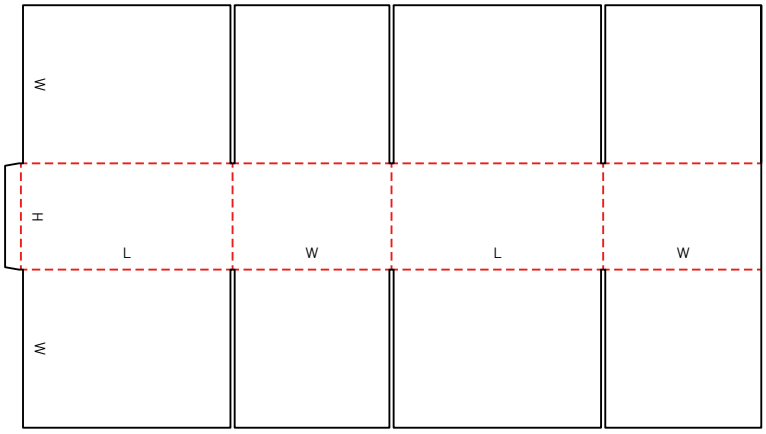

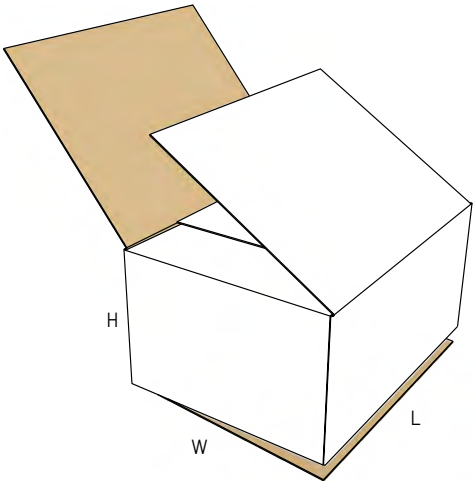

0204 M/A

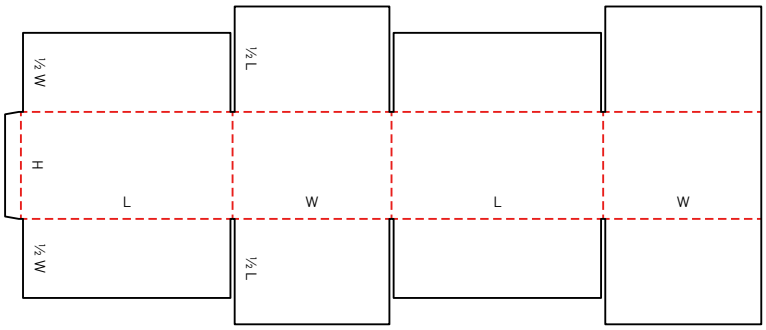

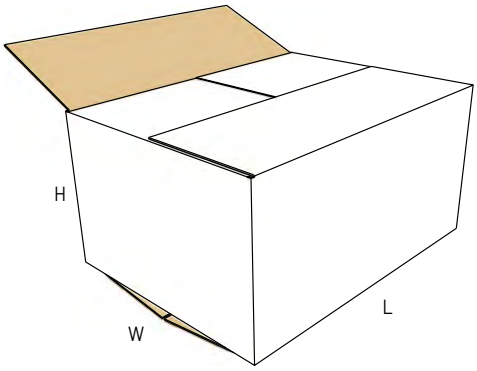

0205 M/A

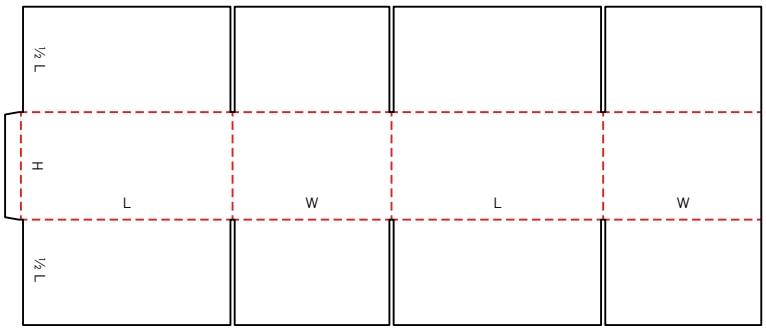

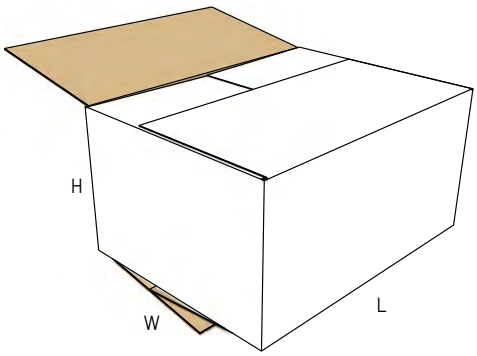

0206 M/A

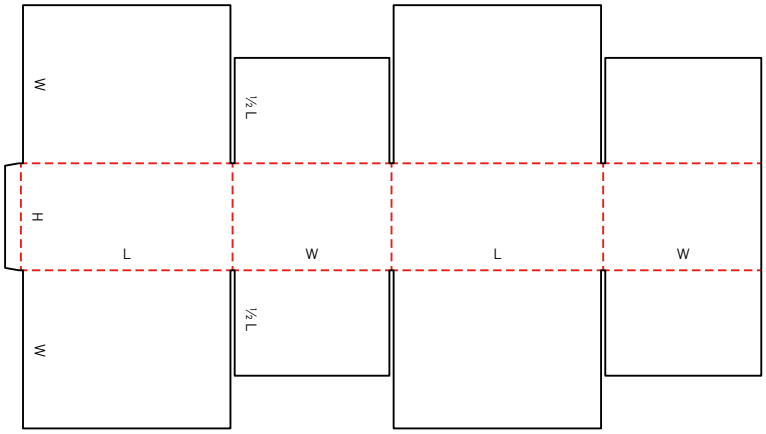

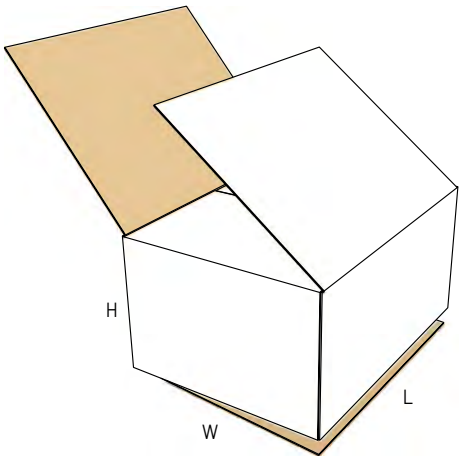

0207 M

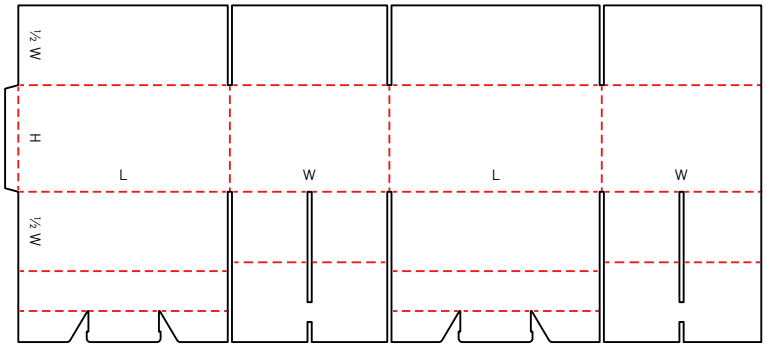

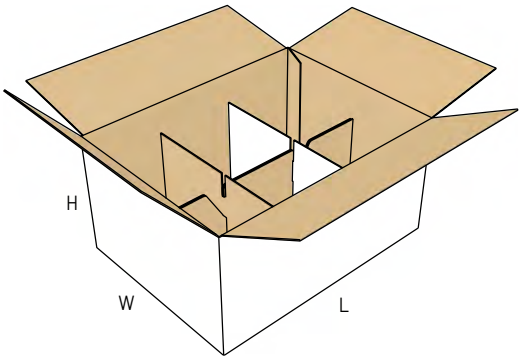

0208 M

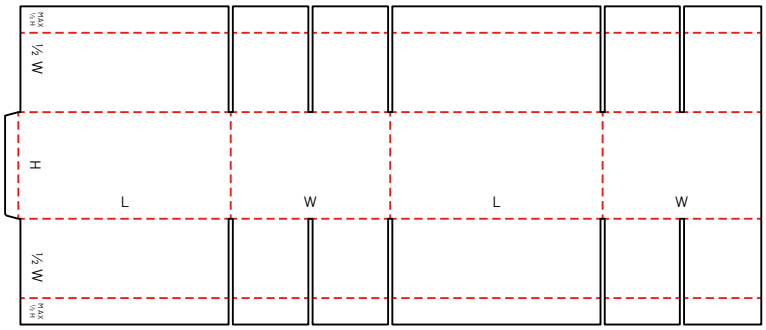

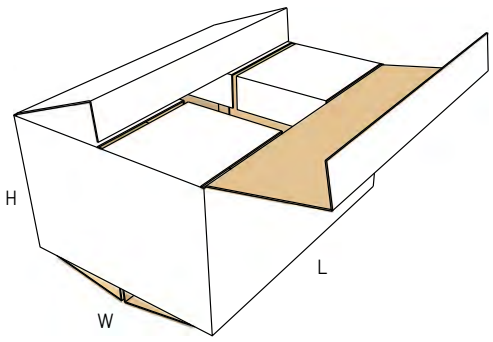

0209 M/A

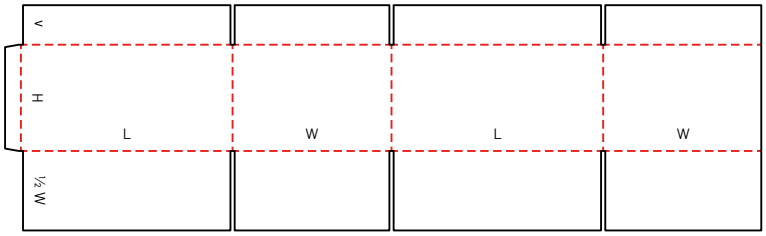

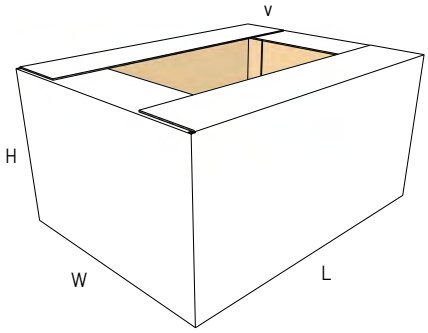

0210 M

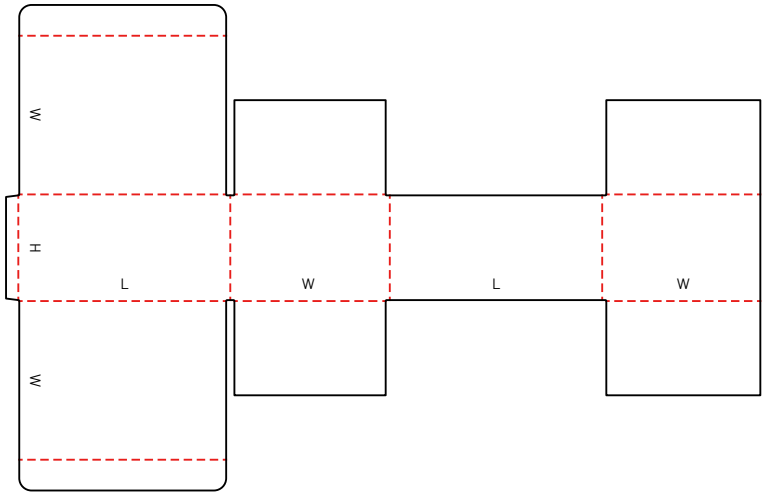

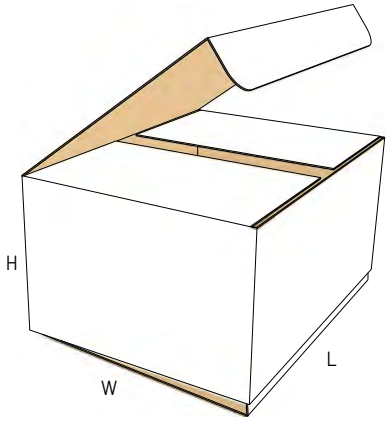

0211 M

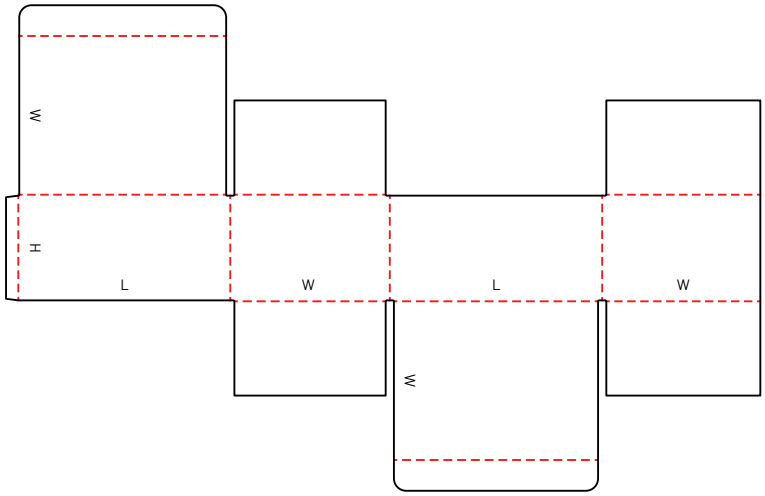

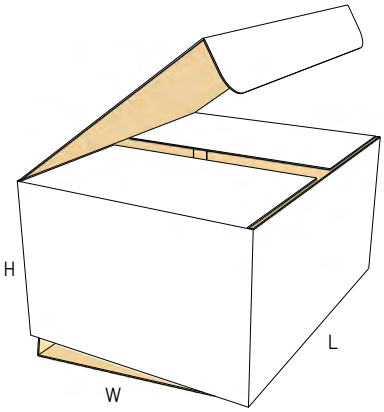

0212 M/A

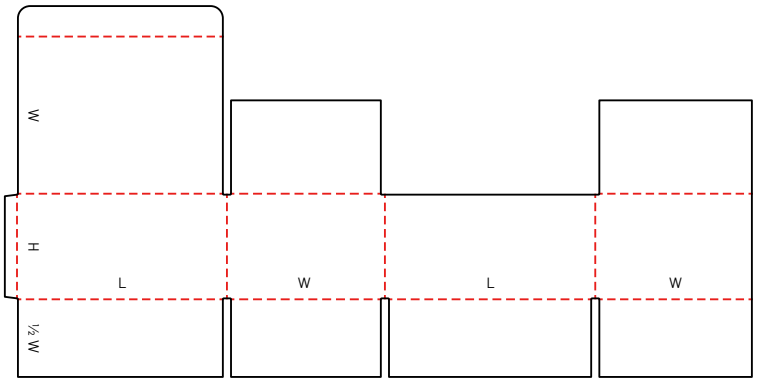

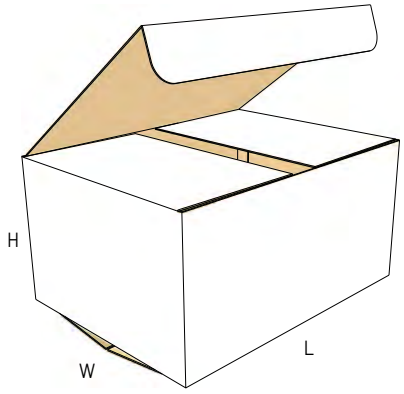

0214 M

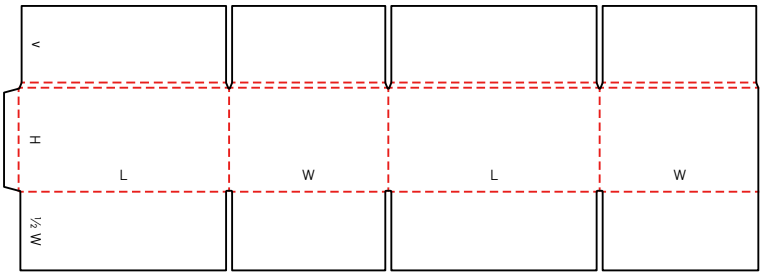

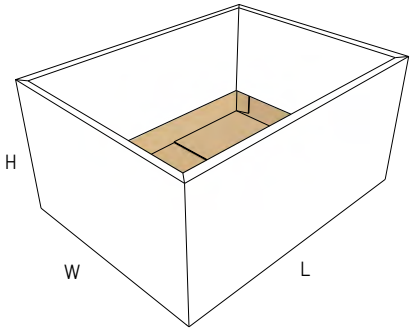

0215 M

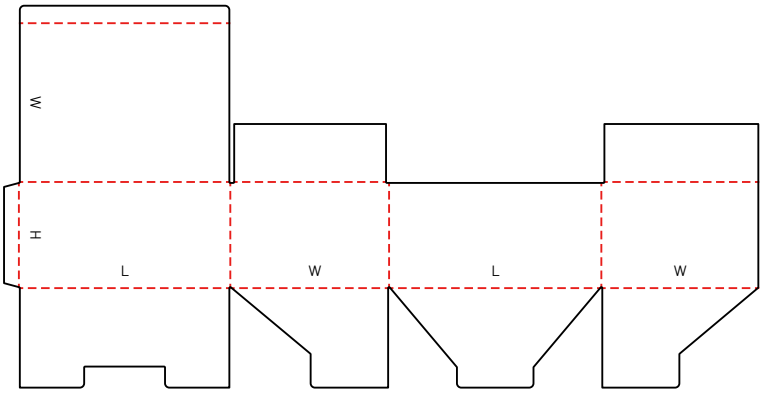

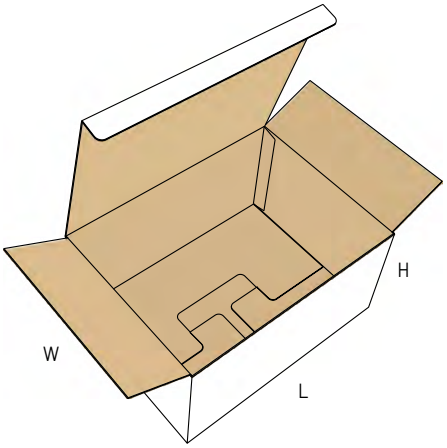

0216 M

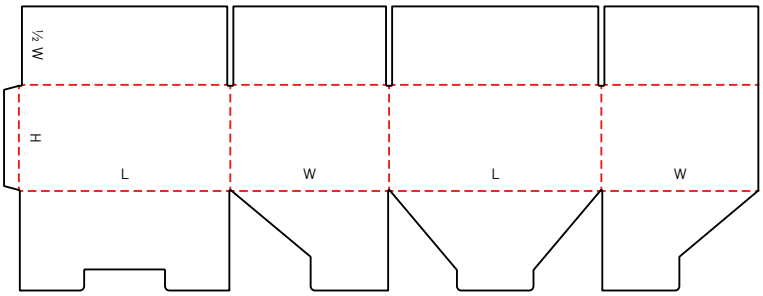

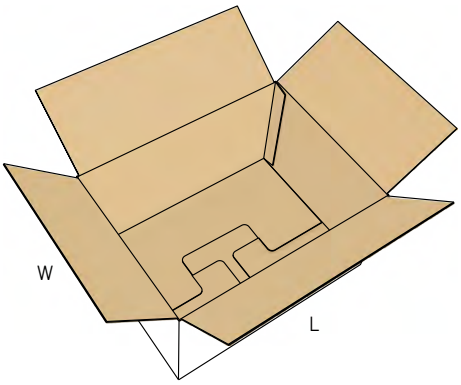

0217 M

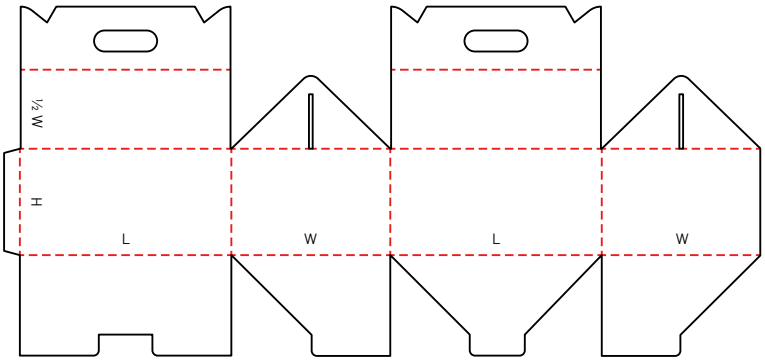

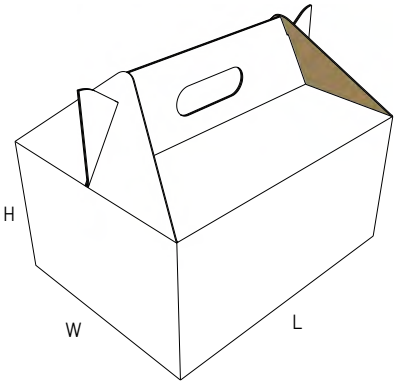

0218 M

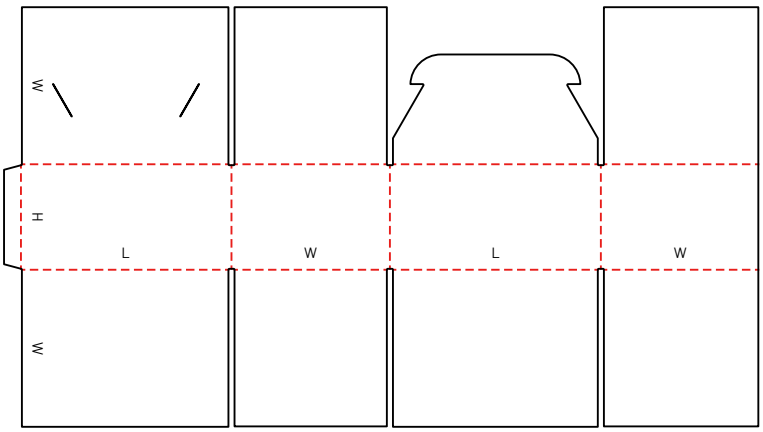

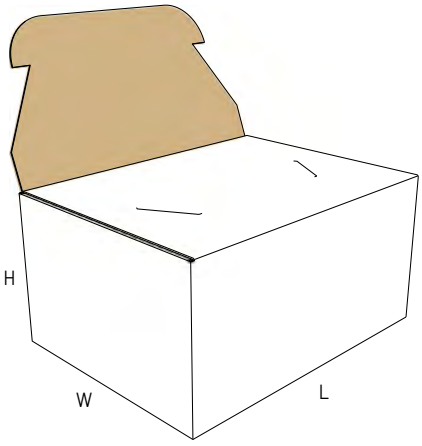

0219 M

NEW

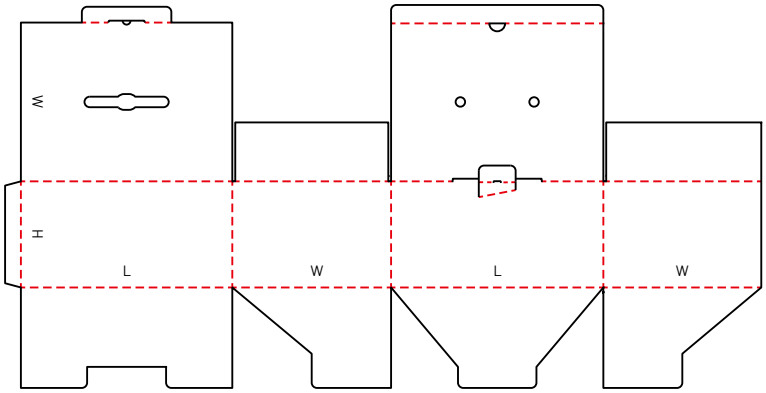

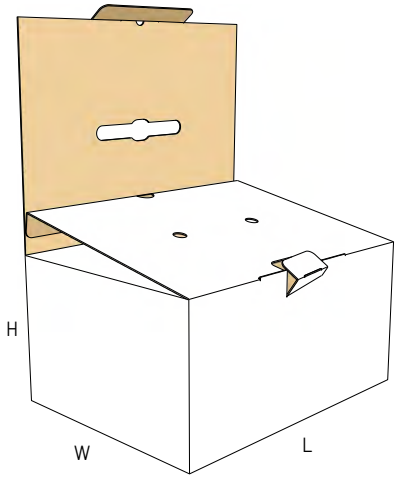

0220 M

NEW

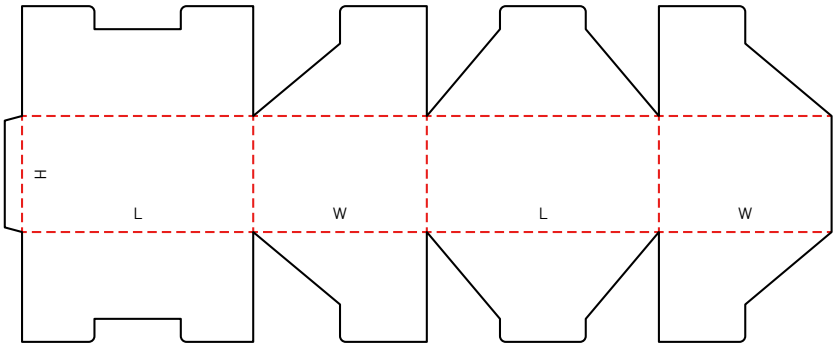

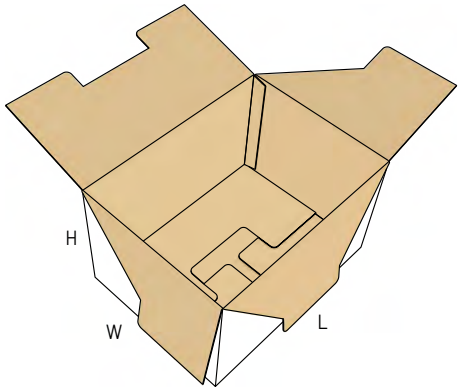

0221 M

NEW

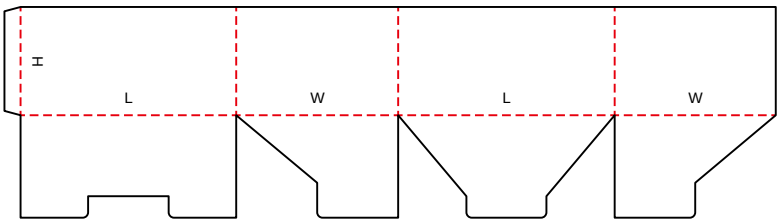

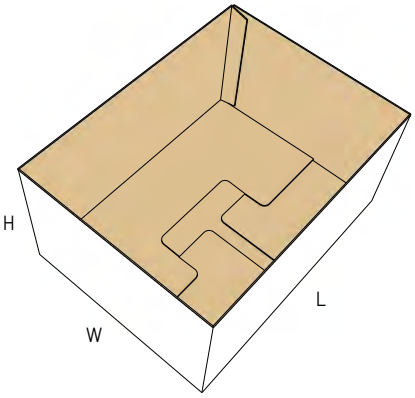

0222 M

NEW

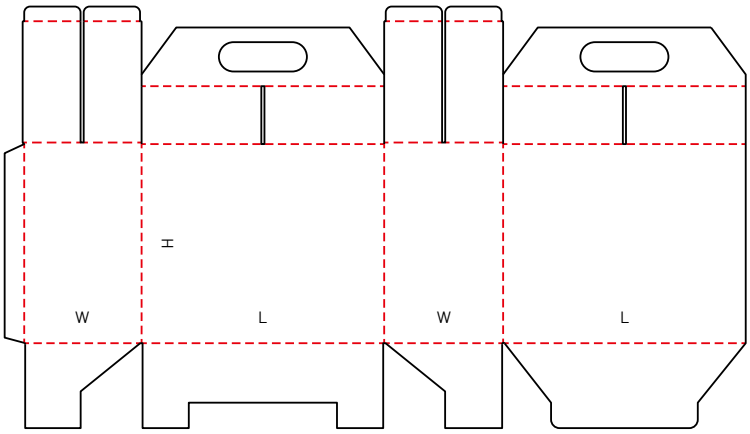

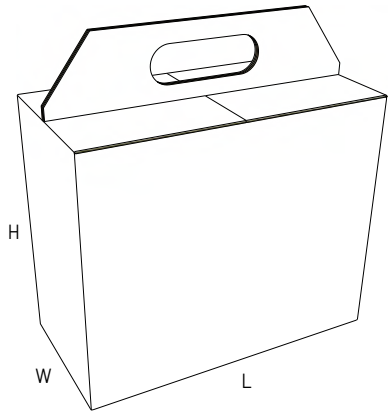

0225 M

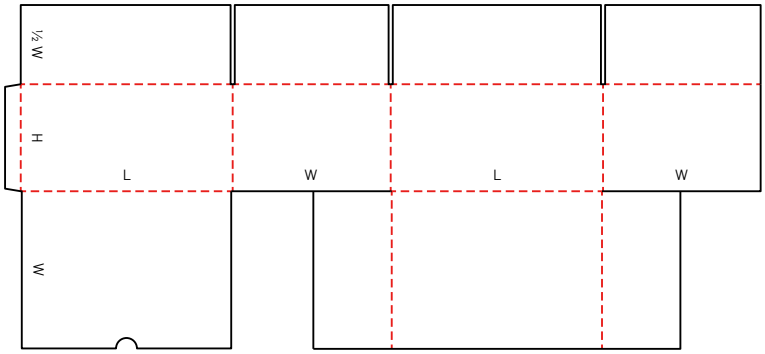

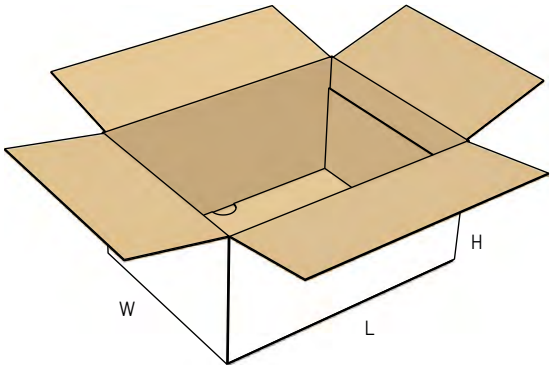

0226 M

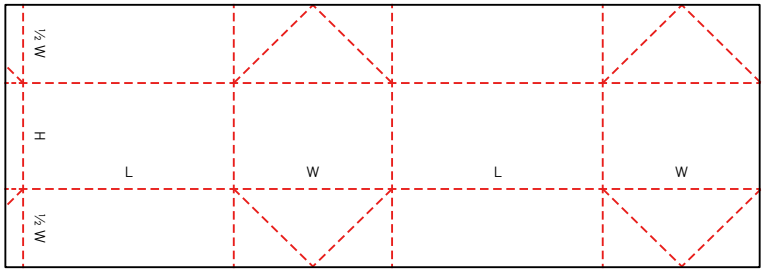

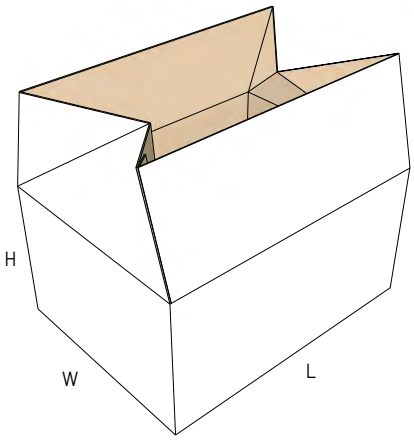

0227 M

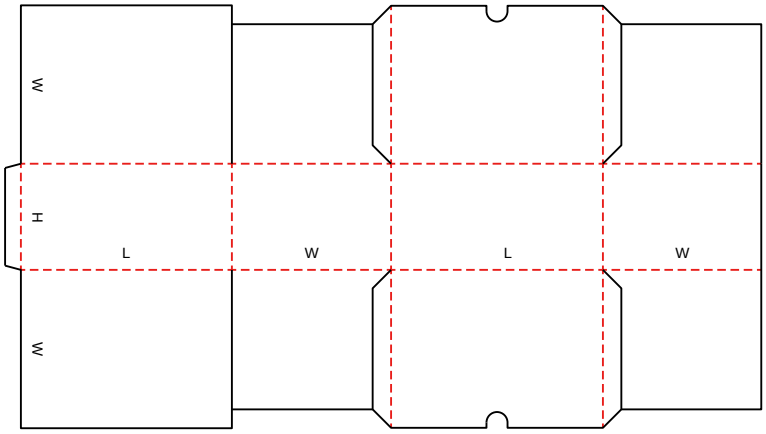

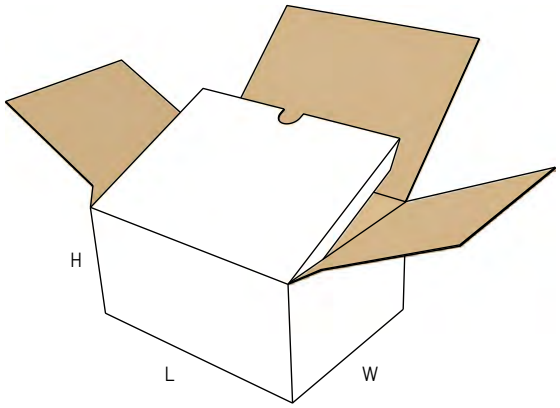

0228 M/A

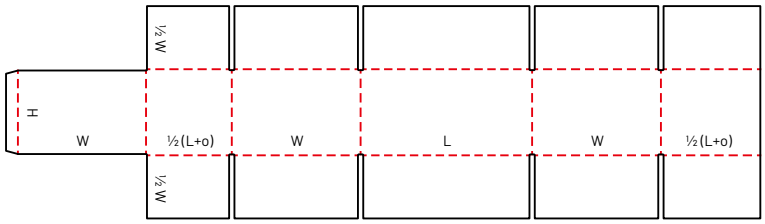

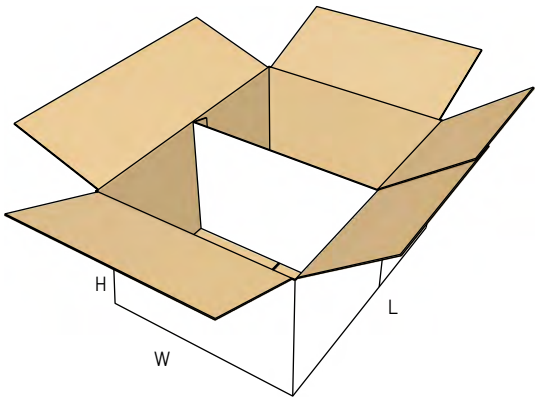

0229 M

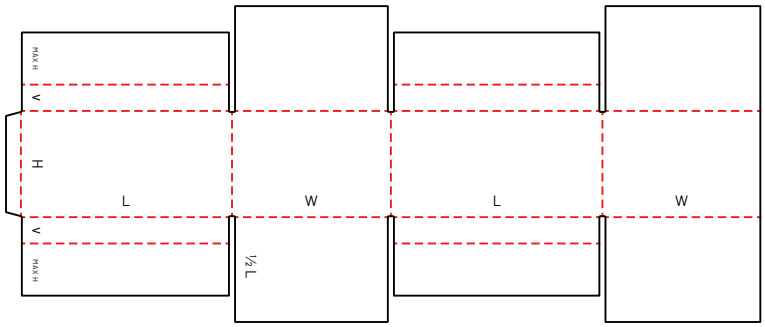

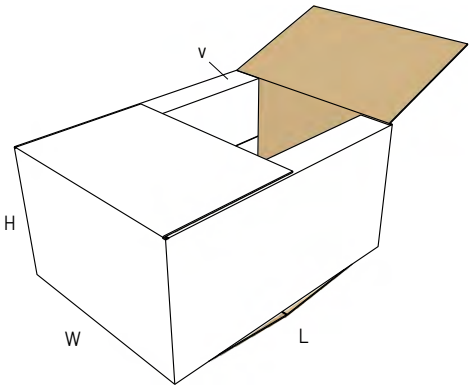

0229.1 M

NEW

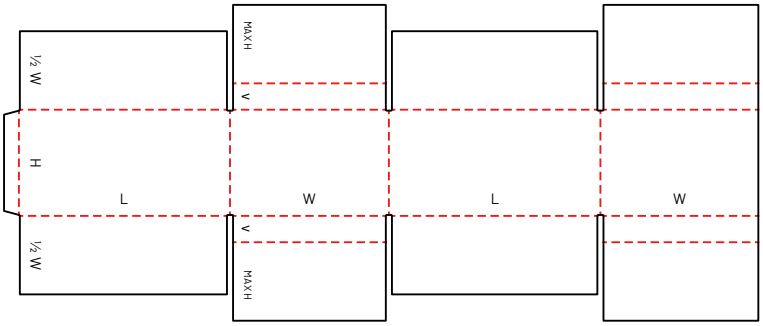

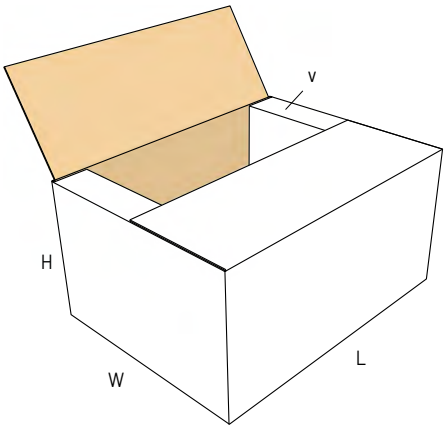

0230 M/A

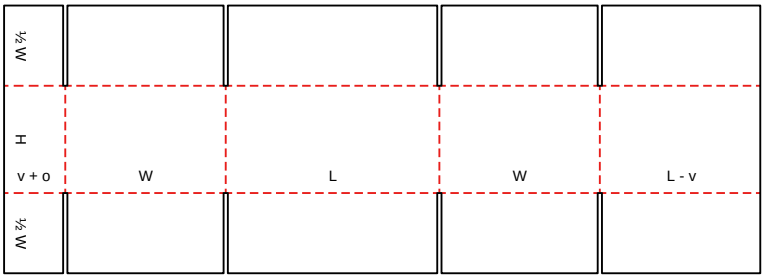

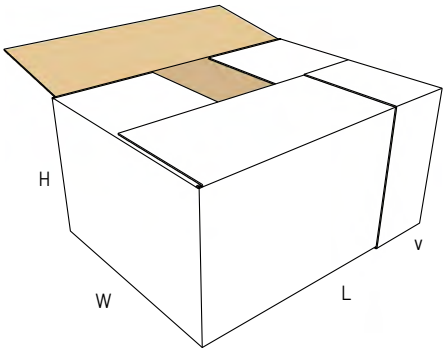

0231 M/A

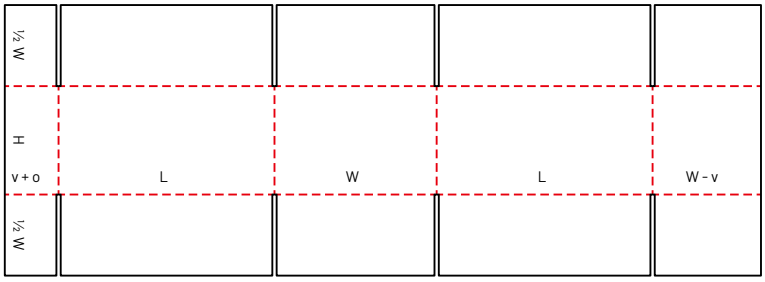

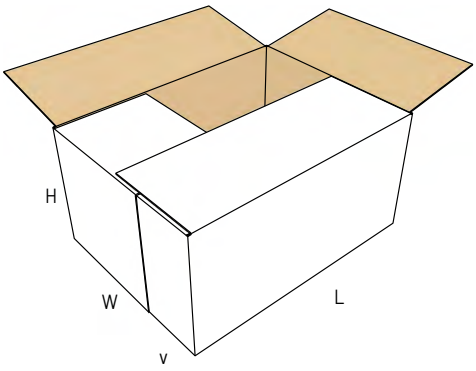

0232 M

NEW

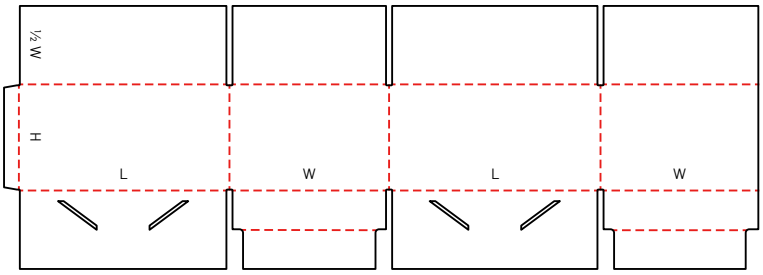

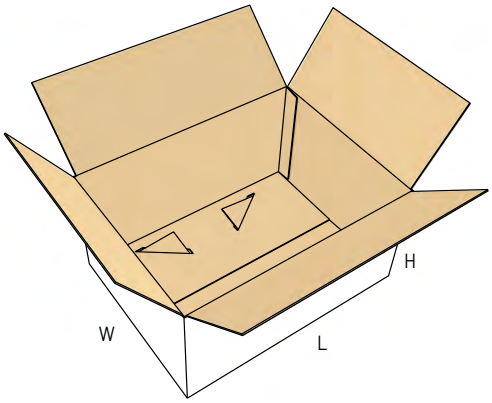

0233 M

NEW

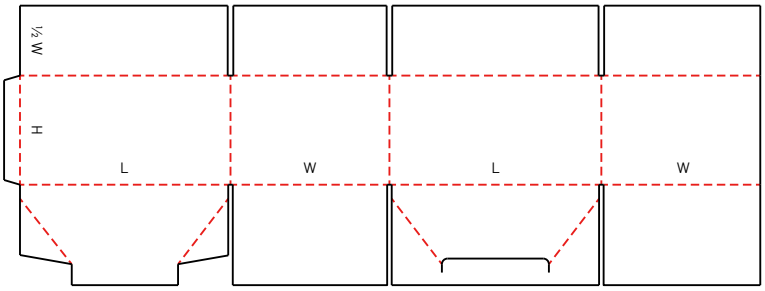

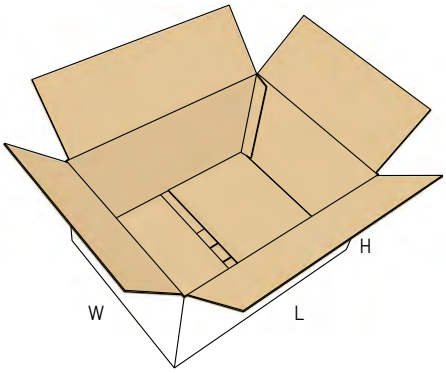

0233.1 M

NEW

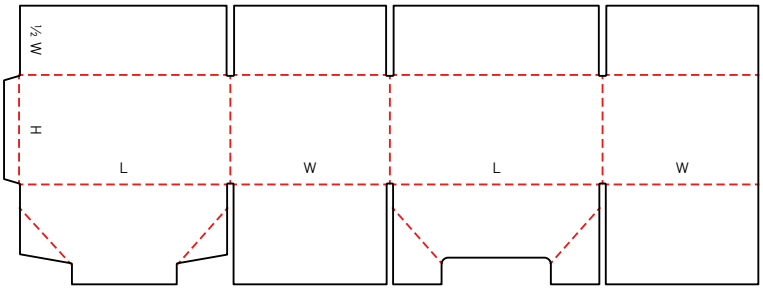

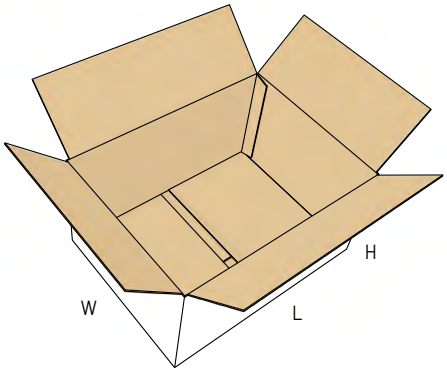

0240 M

NEW

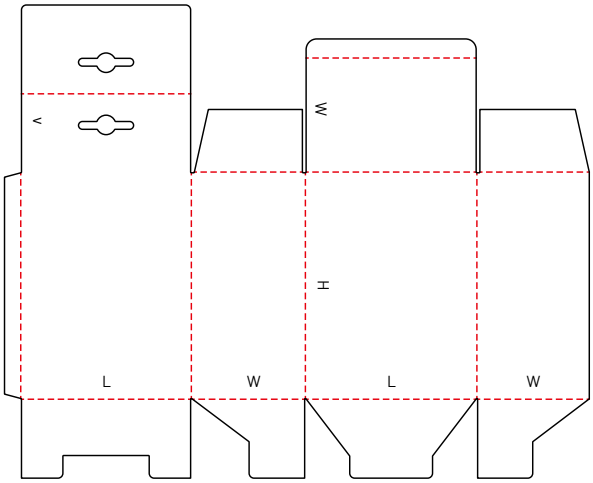

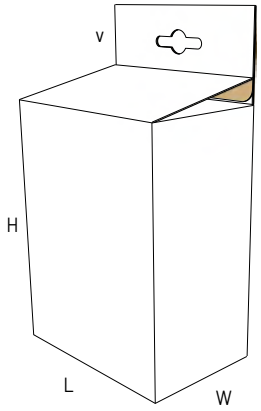

0241 M

NEW

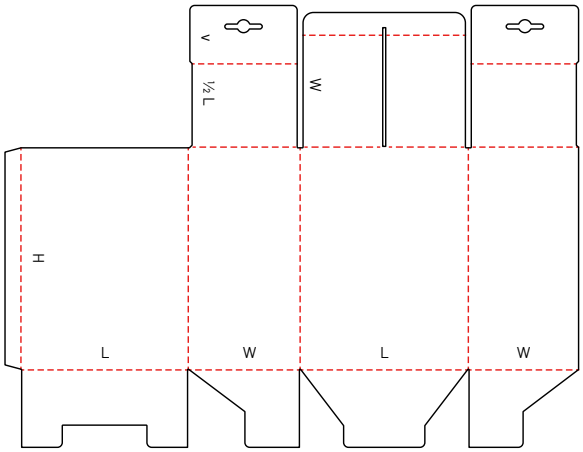

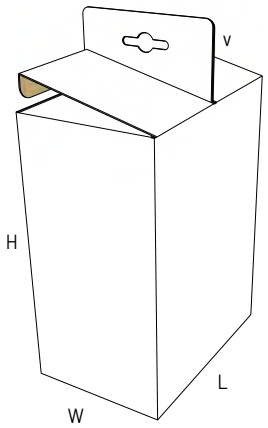

0242 M

NEW

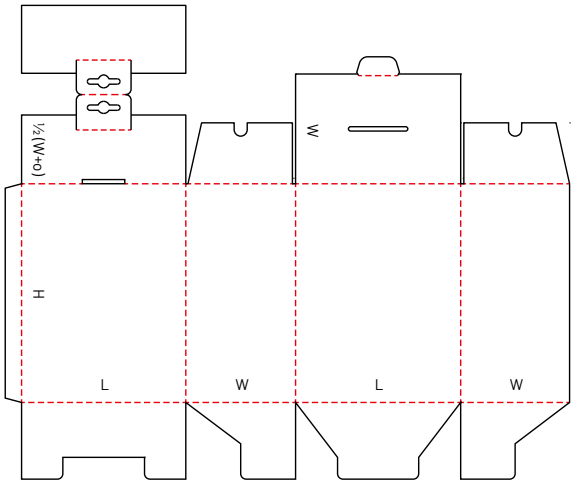

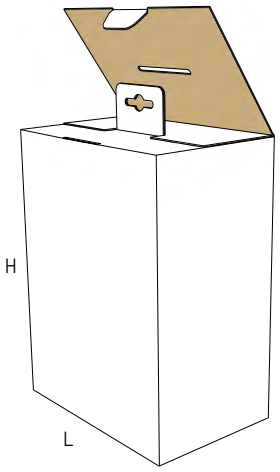

TELESCOPIC BOXES

(Teleskopik Tip Kutular)

EN - Telescopic boxes consist of more than one piece and are characterised by a lid and/or bottom telescoping over the body of the box.

TR - Teleskopik kutular birden fazla parçadan oluşur. Genellikle kutunun kapağı ve gövdesi birbirinden bağımsızdır.

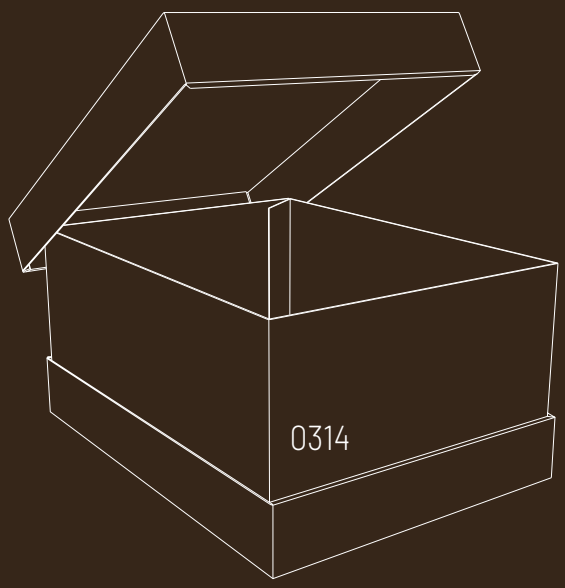

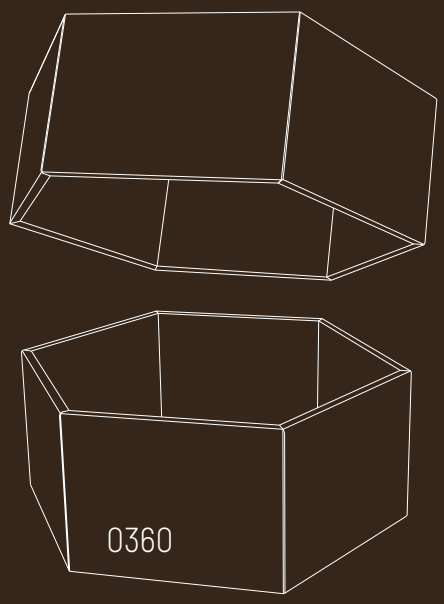

0300 M/A

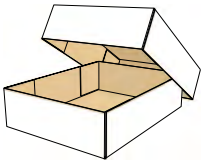

0301 M/A

0302 M

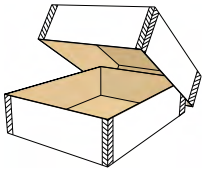

0303 M

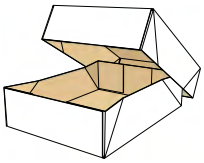

0304 M

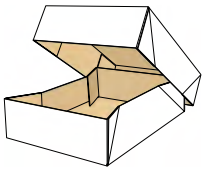

0306 M/A

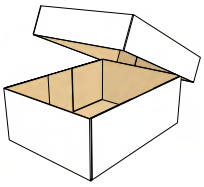

0307 M

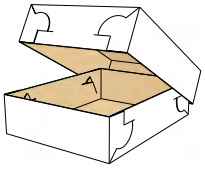

0308 M

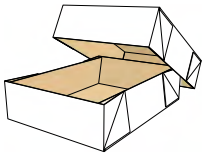

0309 M

0310 M/A

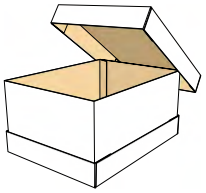

0312 M/A

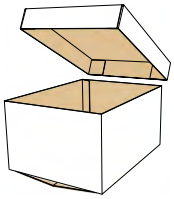

0313 M/A

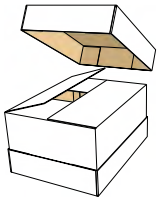

0314 M

0319 M/A
NEW

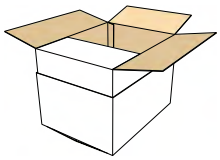

0320 M/A

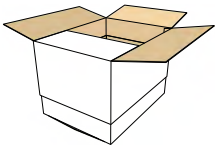

0321 M

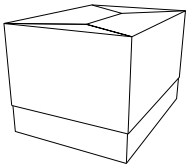

0322 M

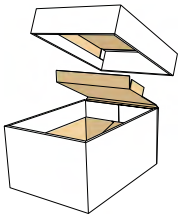

0323 M

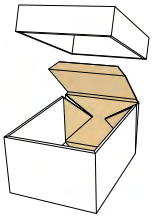

0325 M/A

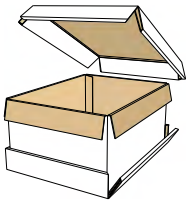

0330 M/A

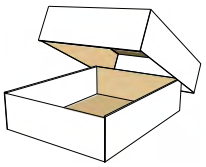

0331 M/A

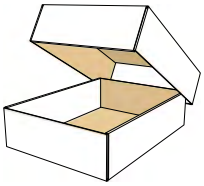

0350 A

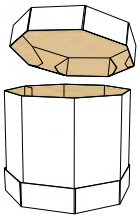

0351 M/A

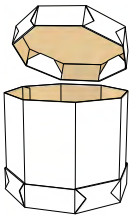

0352 M/A

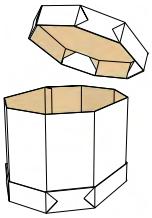

0360 M
NEW

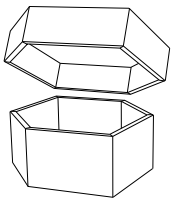

0300 M/A

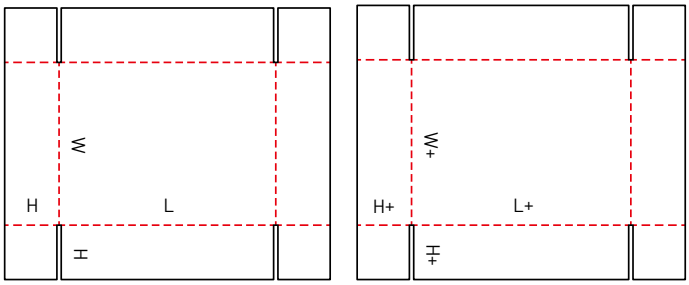

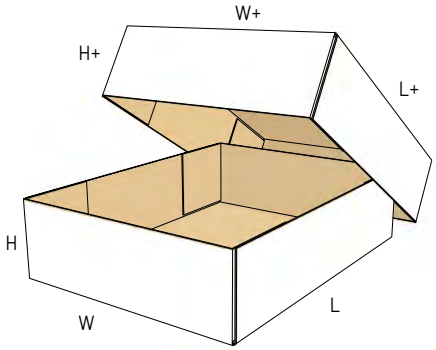

0301 M/A

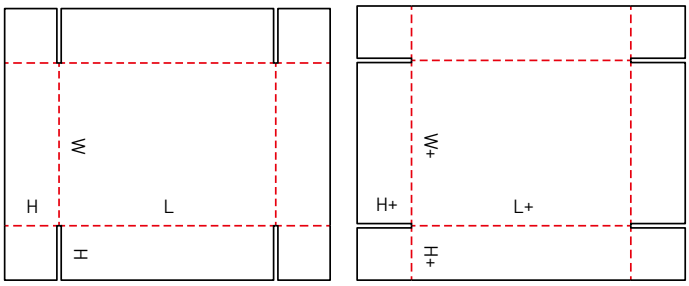

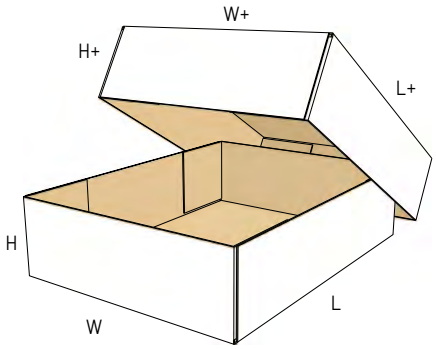

0302 M

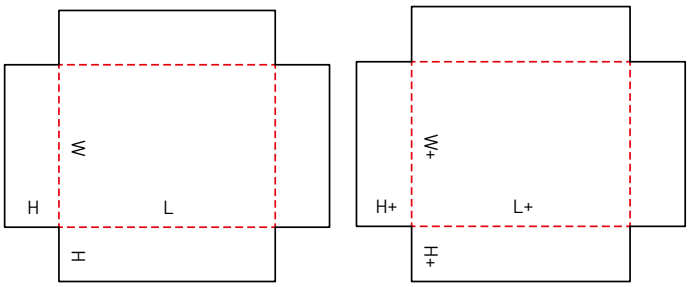

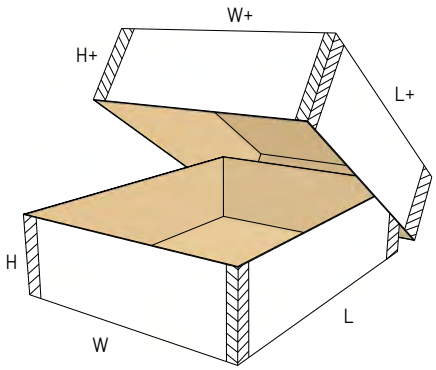

0303 M

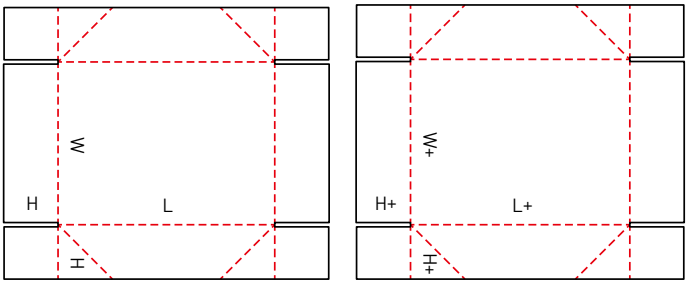

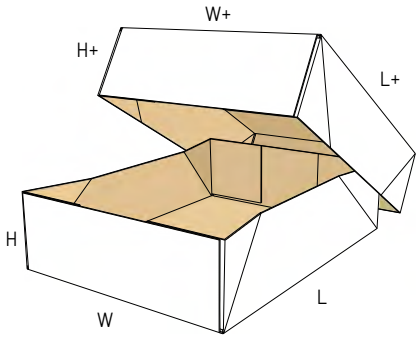

0304 M

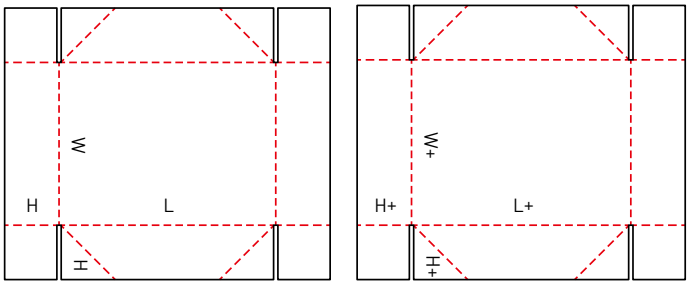

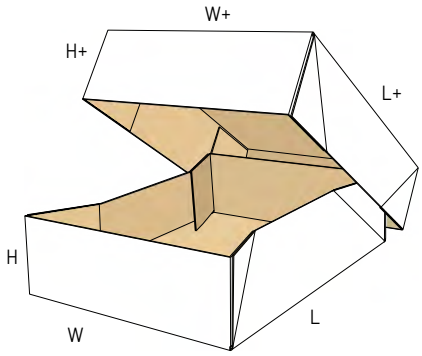

0306 M/A

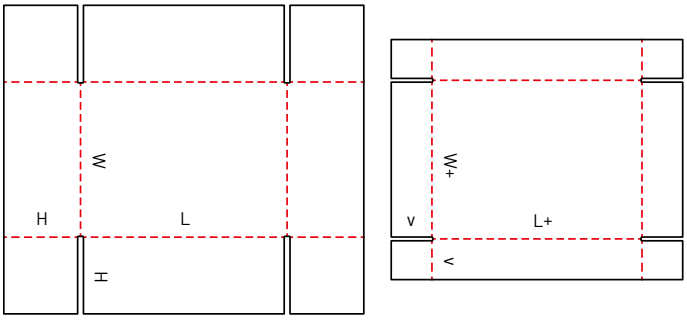

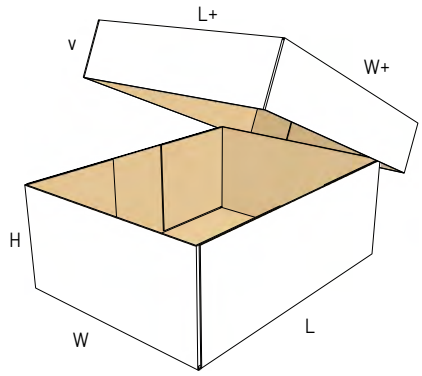

0307 M

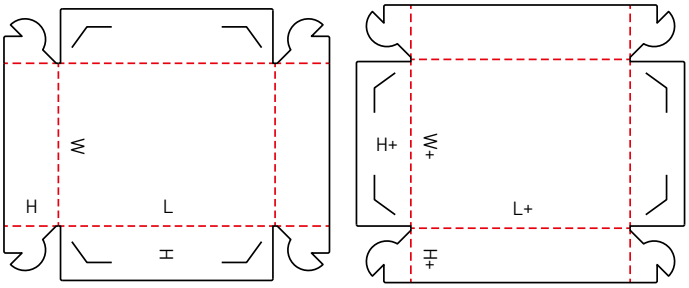

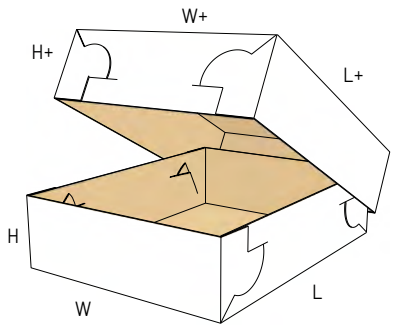

0308 M

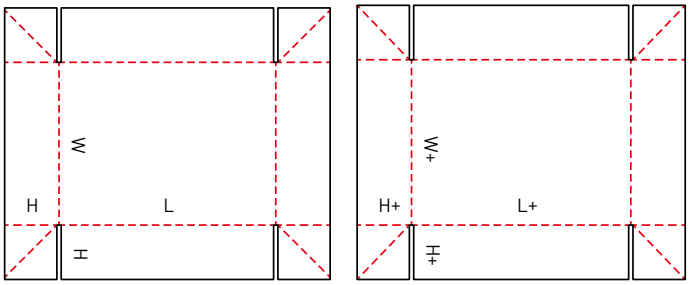

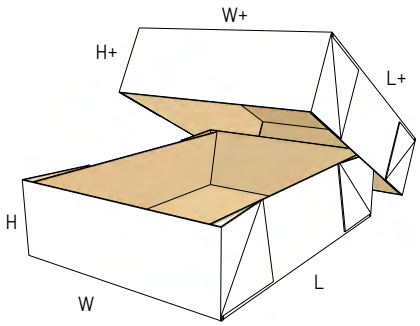

0309 M

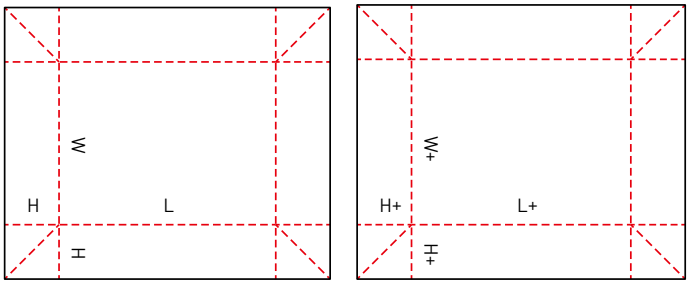

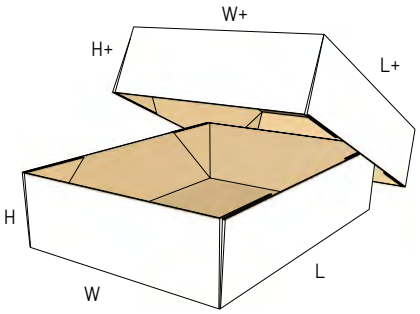

0310 M/A

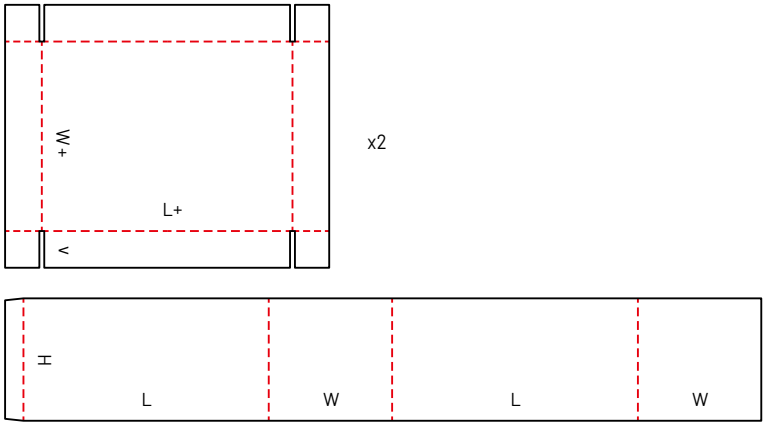

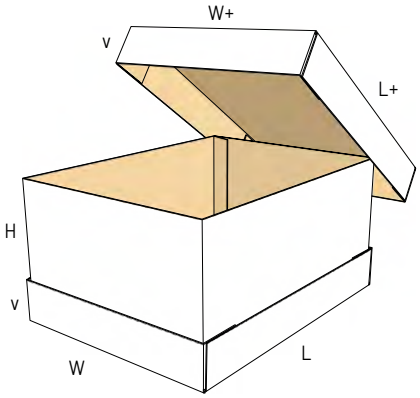

0312 M/A

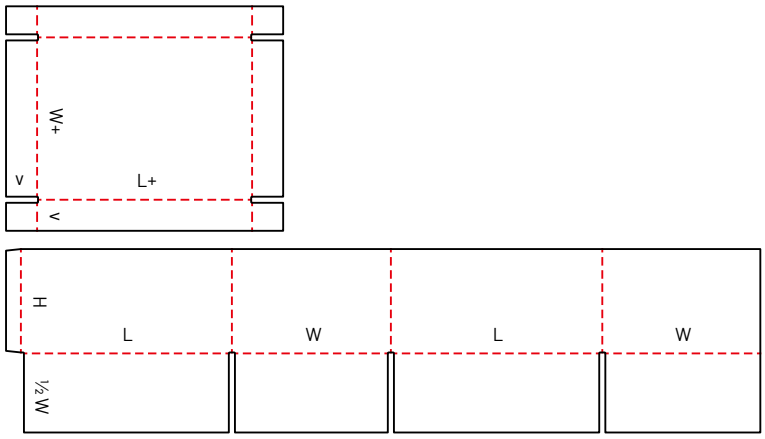

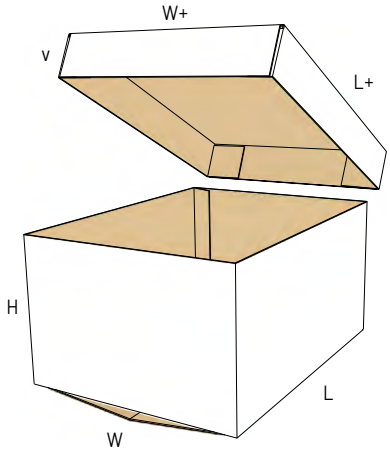

0313 M/A

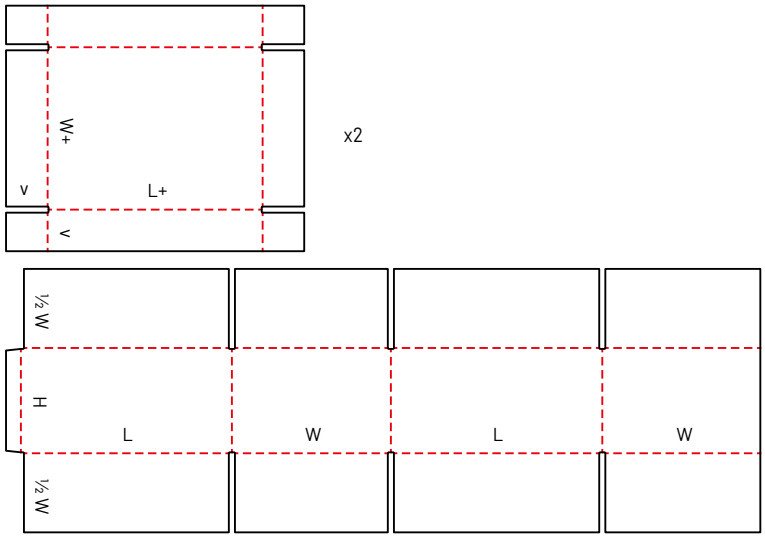

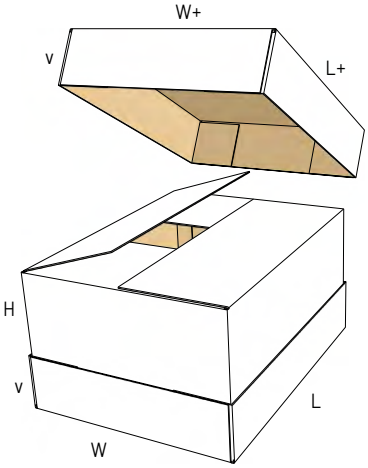

0314 M

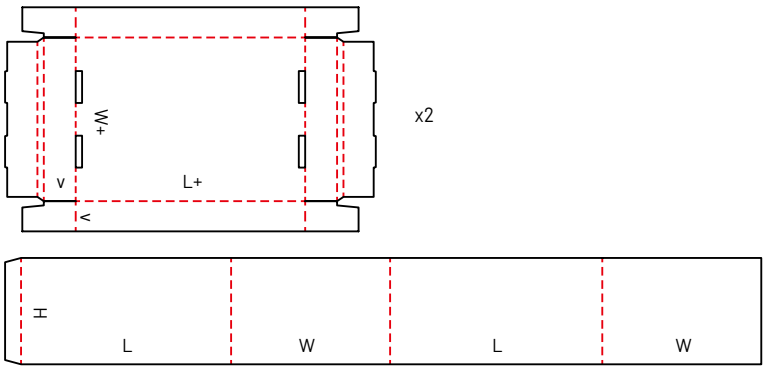

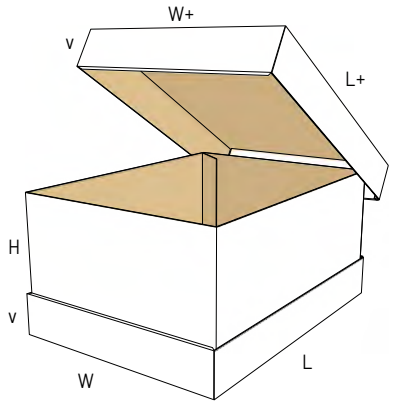

0319 M/A

NEW

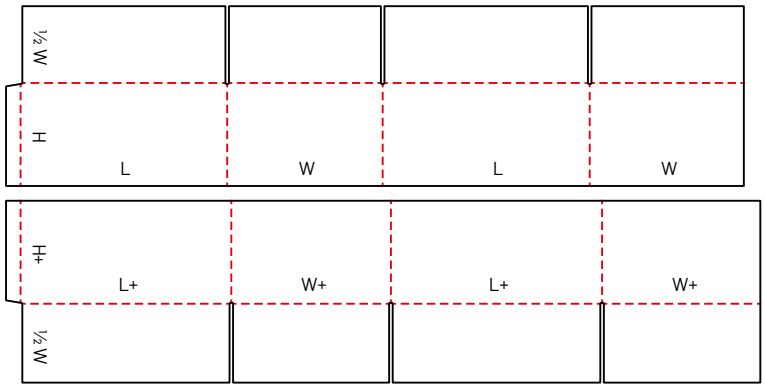

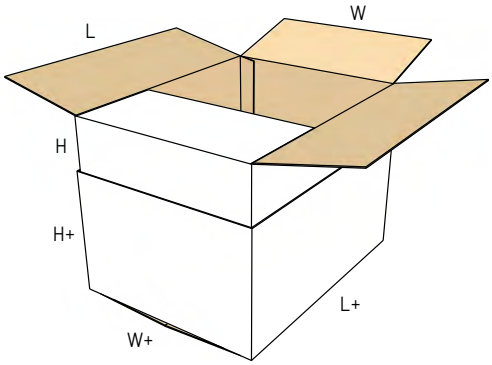

0320 M/A

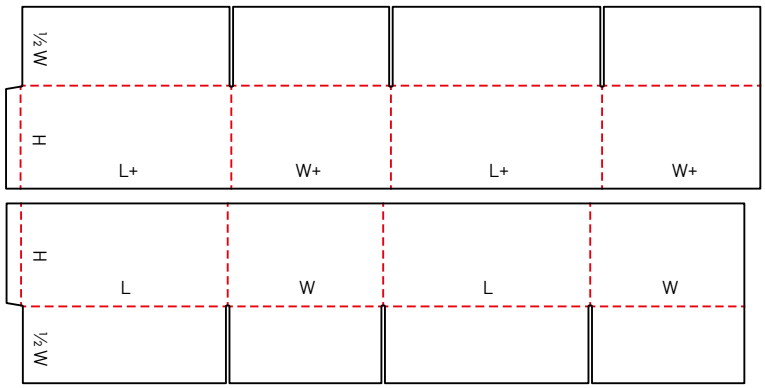

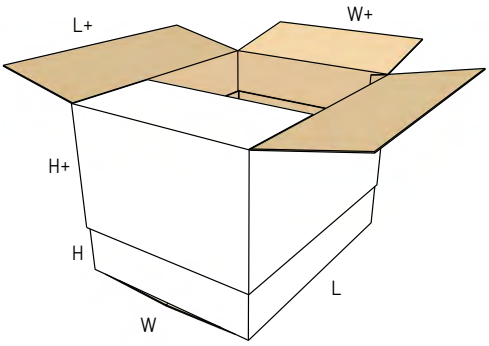

0321 M

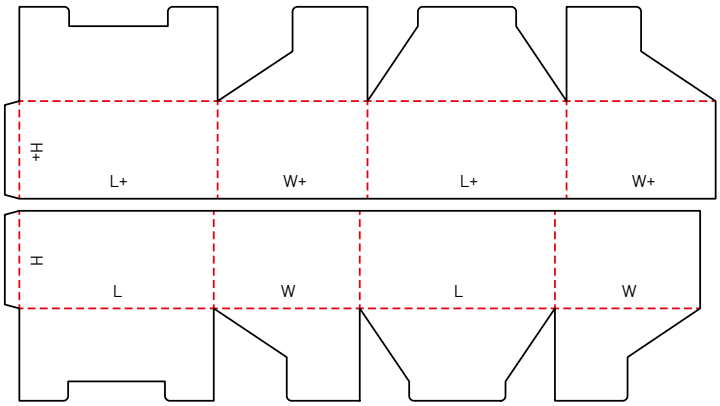

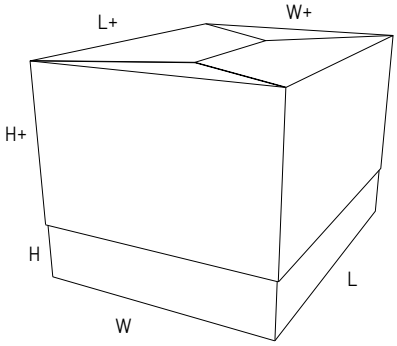

0322 M

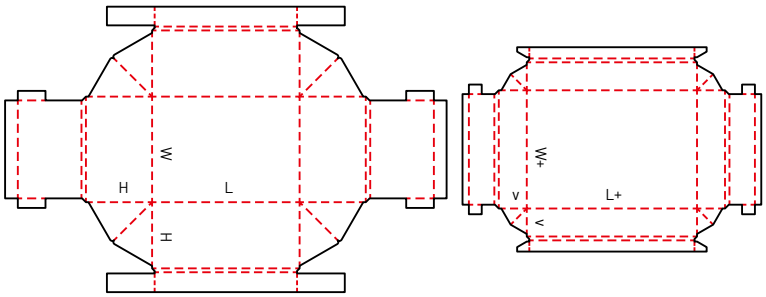

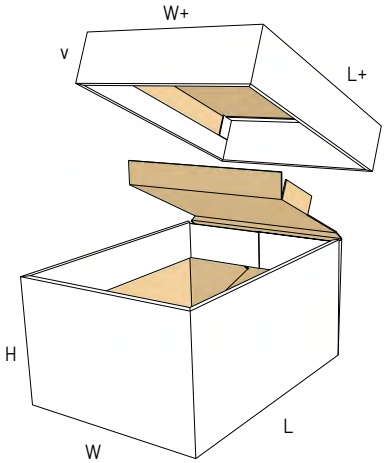

0323 M

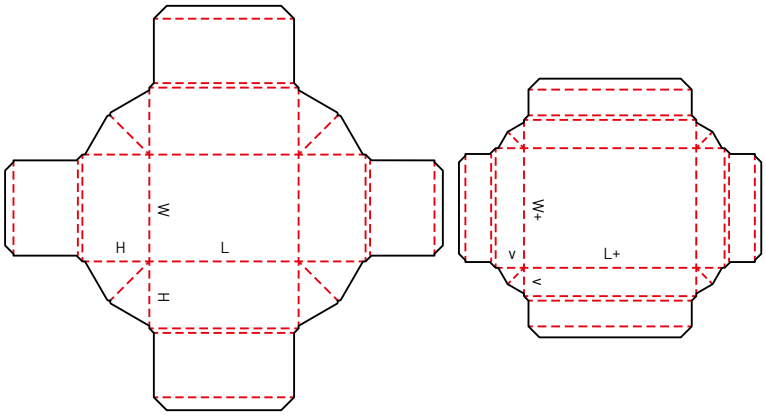

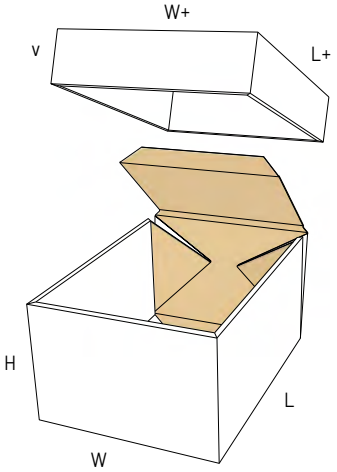

0325 M/A

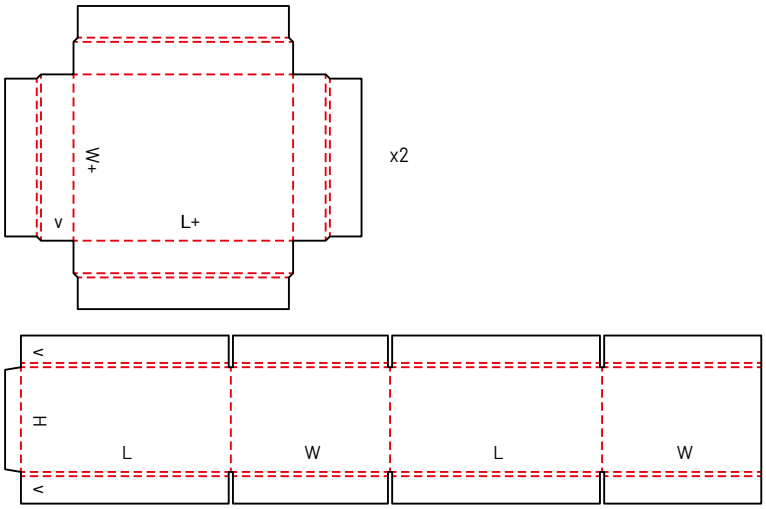

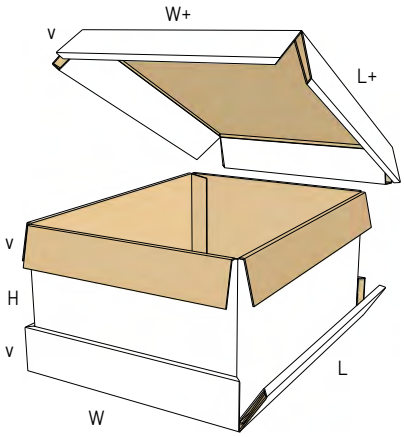

0330 M/A

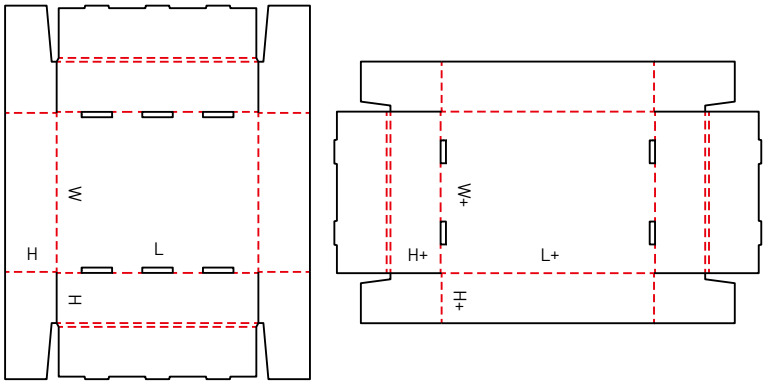

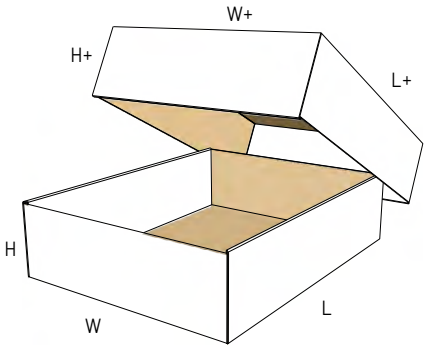

0331 M/A

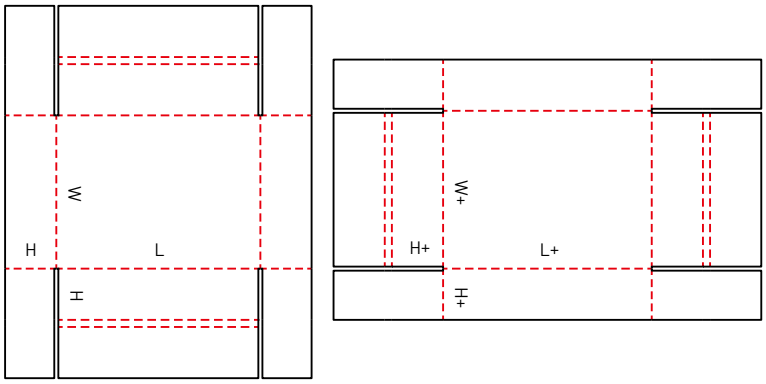

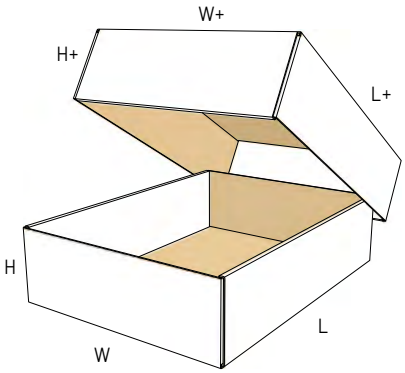

0350 A

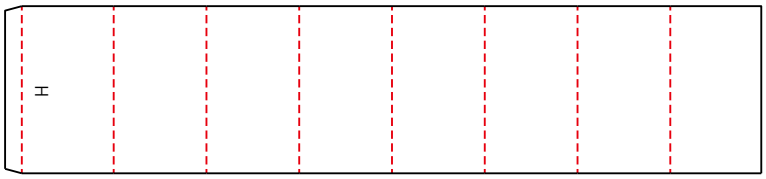

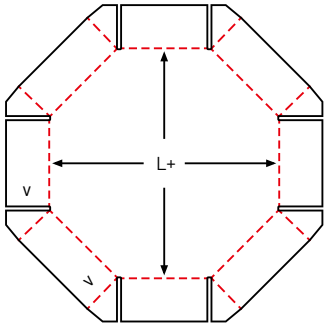

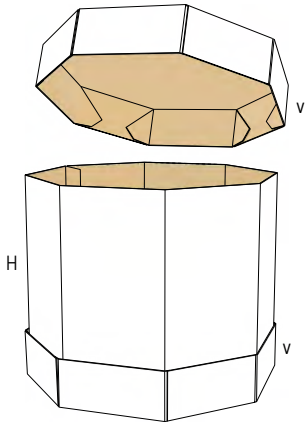

0351 M/A

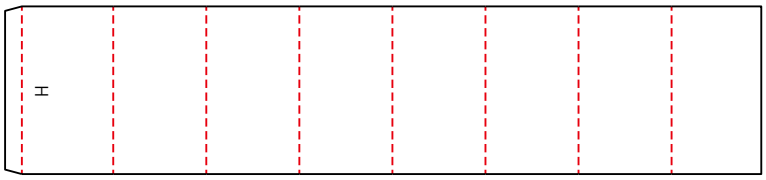

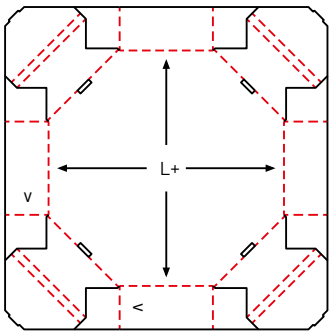

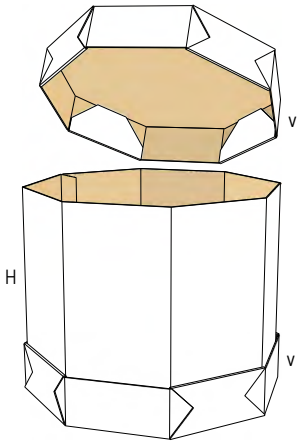

0352 M/A

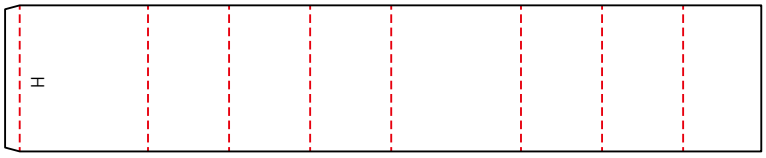

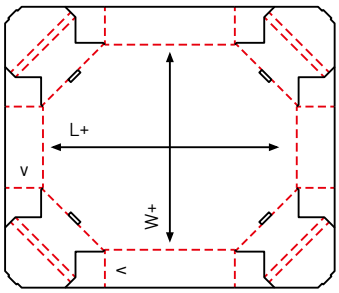

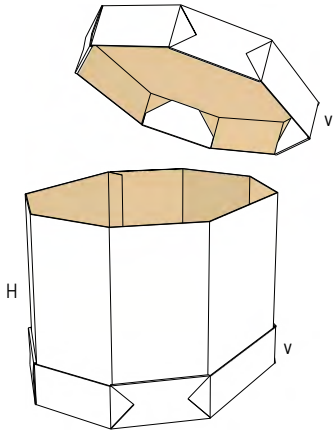

0360 M

NEW

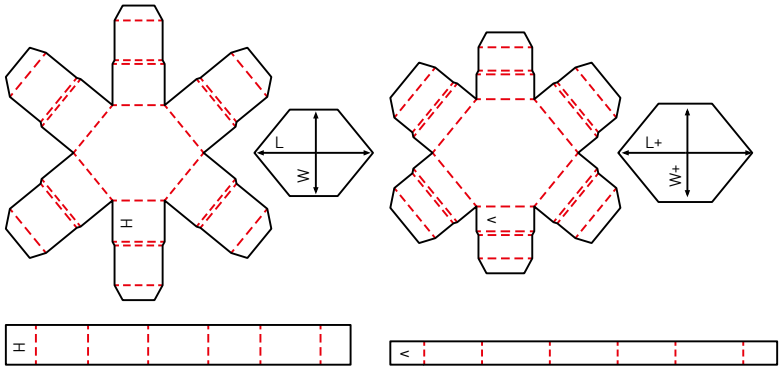

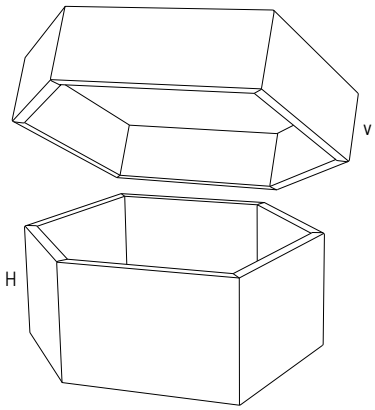

FOLDER BOXES AND TRAYS

(Dosya Tipi Kutular)

EN - Folder boxes and trays are usually made from one piece of board. The bottom of the box is hinged to form two or all side walls and the cover. Locking tabs, handles, display panels, etc. can be incorporated in some designs.

TR - Dosya tipi kutular genellikle tek parçadan oluşur. Kutunun altı, iki veya tüm yan duvarları ve kapağı oluşturacak şekilde birleştirilmektedir. Bazı tasarımlara kilitleme tırnakları, kulplar, ekran panelleri vb. dahil edilebilir.

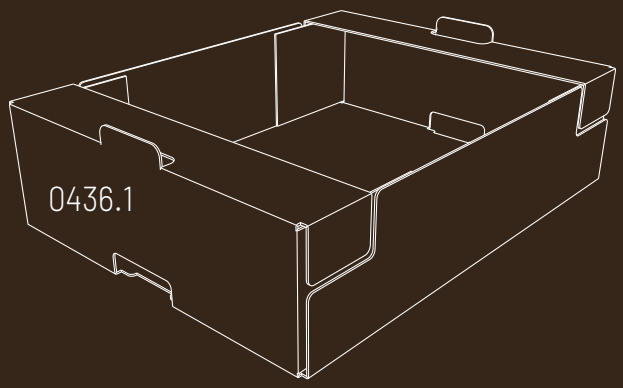

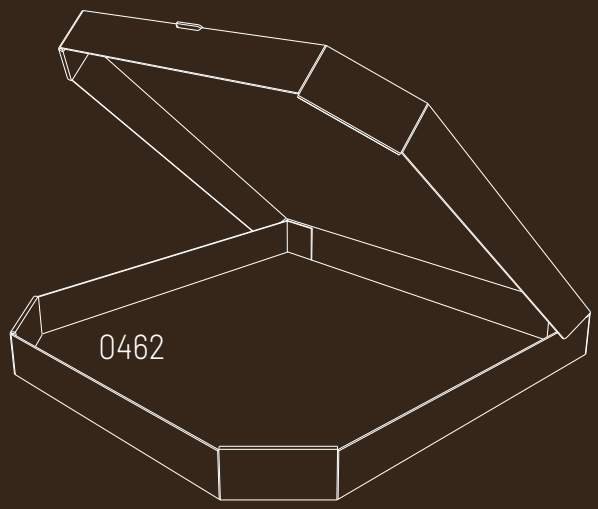

0400 M

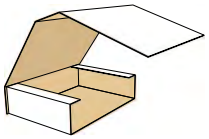

0401 M

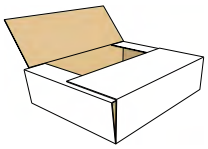

0402 M

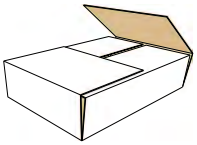

0403 M

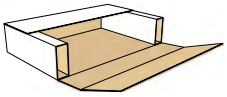

0404 M

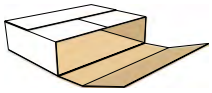

0405 M

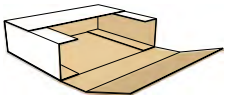

0406 A

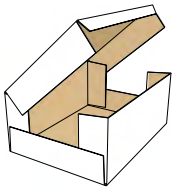

0407 M
NEW

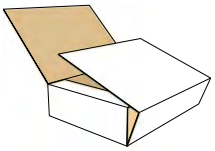

0409 M/A

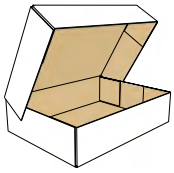

0410 M/A

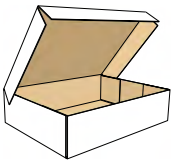

0411 M/A

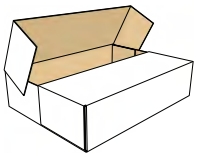

0412 M

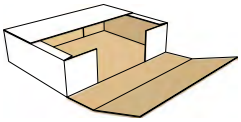

0413 M/A

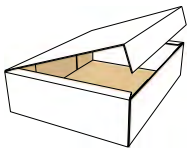

0414 M
NEW

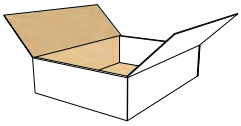

0415 M/A

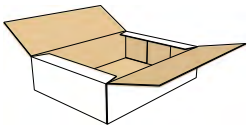

0416 M

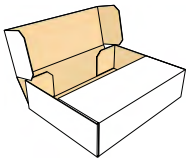

0418 M
NEW

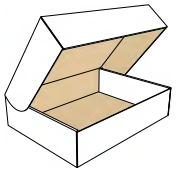

0420 M/A

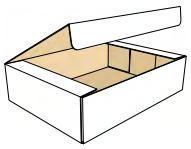

0421 M/A

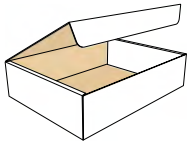

0422 M/A

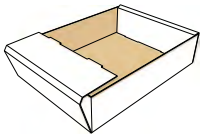

0423 M/A

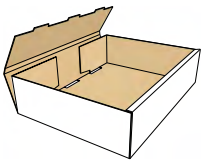

0424 M/A

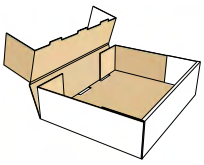

0425 M/A

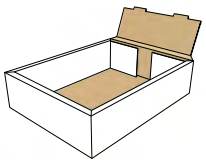

0425.1 M/A
NEW

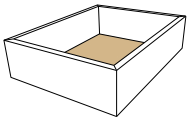

0426 M

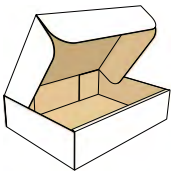

0427 M

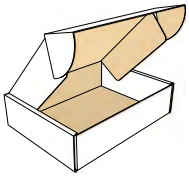

0427.1 M
NEW

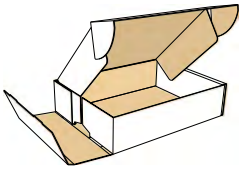

0428 M

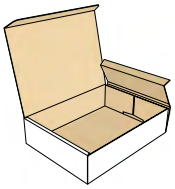

0429 M

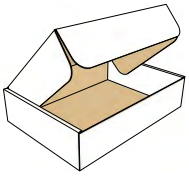

0430 M/A

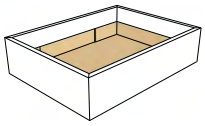

0431 M

0432 M

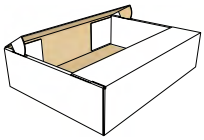

0433 M

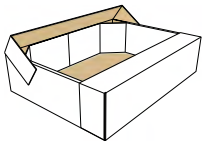

0434 A

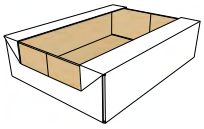

0435 M/A

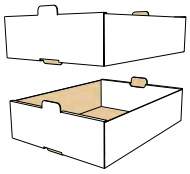

0435.1 M/A
NEW

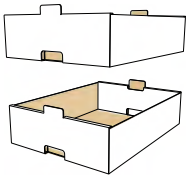

0436 M

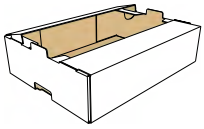

0436.1 A
NEW

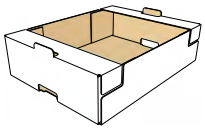

0436.2 A
NEW

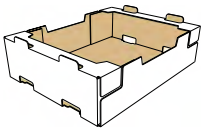

0437 M

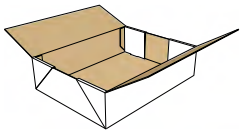

0438 A
NEW

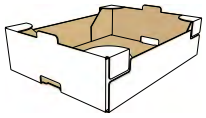

0439 M
NEW

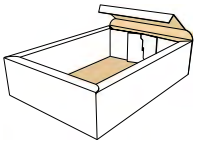

0440 A

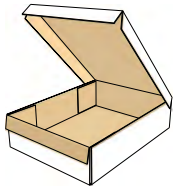

0441 A

0442 M

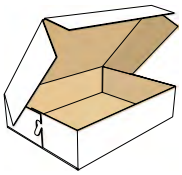

0443 M

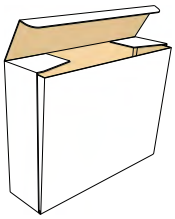

0444 M

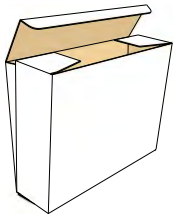

0445 M

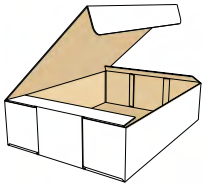

0446 A

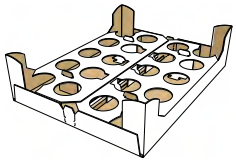

0447 M

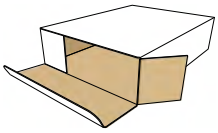

0448 M

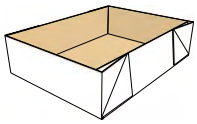

0449 M

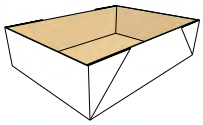

0449.1 M
NEW

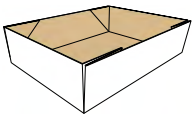

0450 M

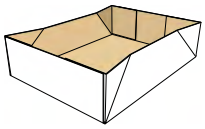

0451 M

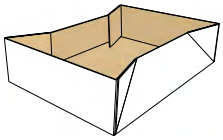

0451.1 M
NEW

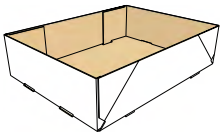

0452 A

0453 A

0454 M

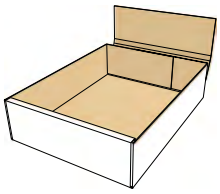

0455 M

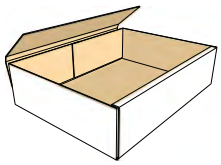

0456 M

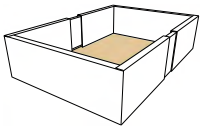

0457 M

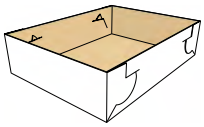

0458 M

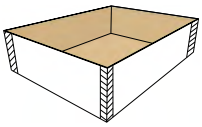

0459 A

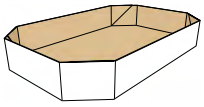

0459.1 A
NEW

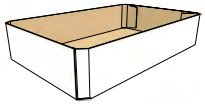

0460 A

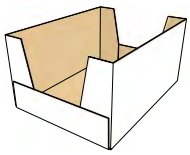

0461 M/A
NEW

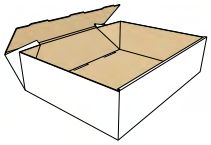

0462 M
NEW

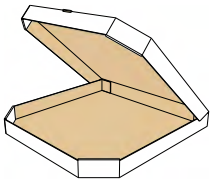

0463 M
NEW

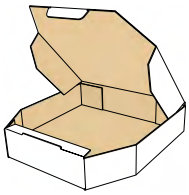

0464 M
NEW

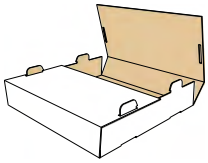

0465 M
NEW

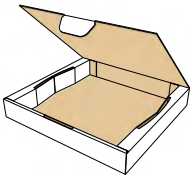

0466 M
NEW

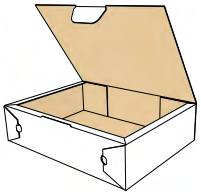

0469 M
NEW

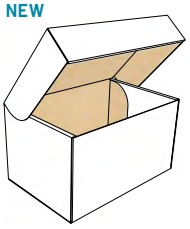

0470 M

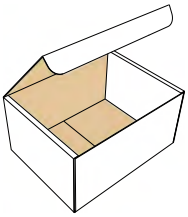

0471 M

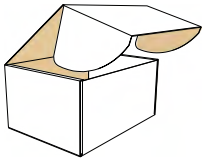

0472 M

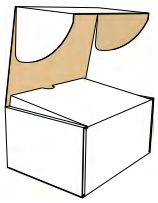

0473 M

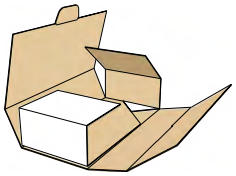

0474 M
NEW

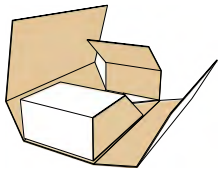

0475 M
NEW

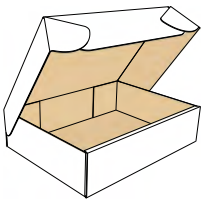

0476 M
NEW

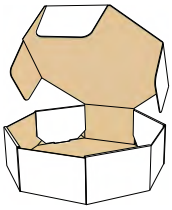

0480 A

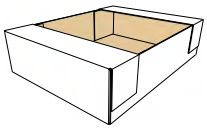

0481 M
NEW

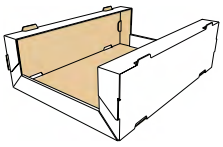

0482 M
NEW

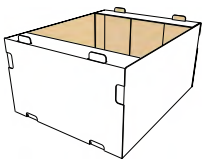

0483 A
NEW

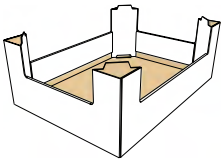

0484 M
NEW

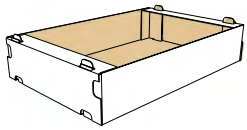

0485 M
NEW

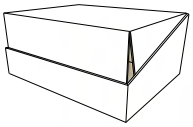

0400 M

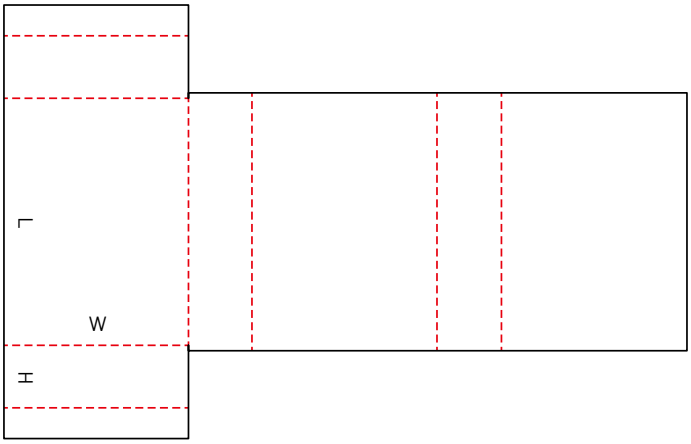

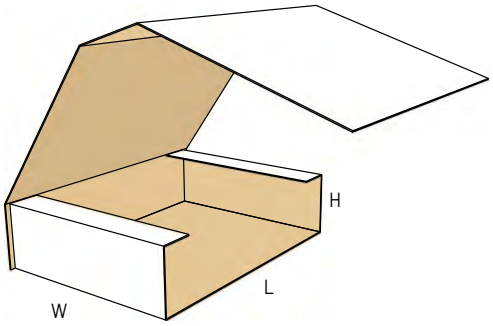

0401 M

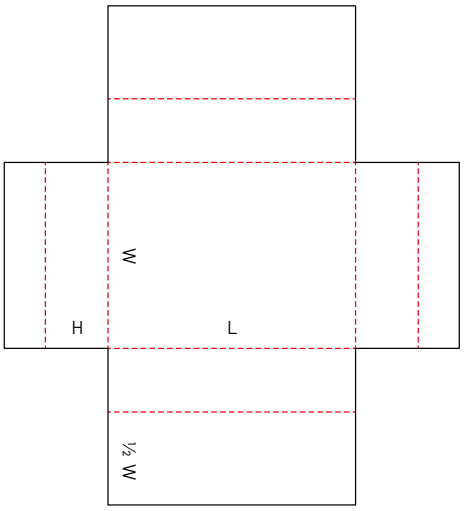

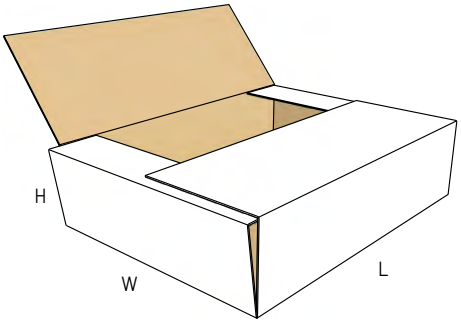

0402 M

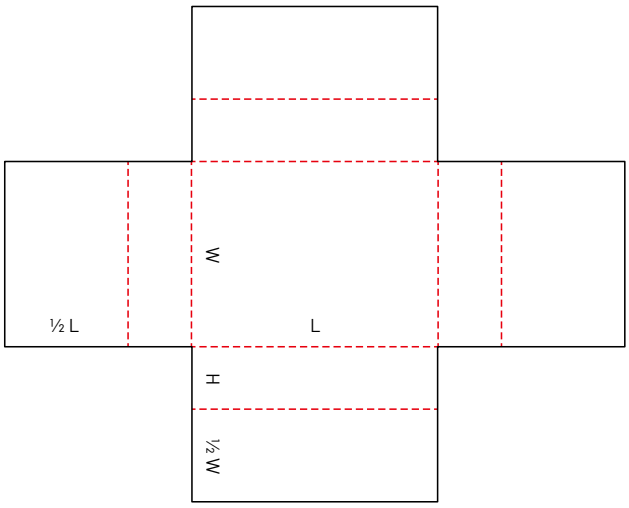

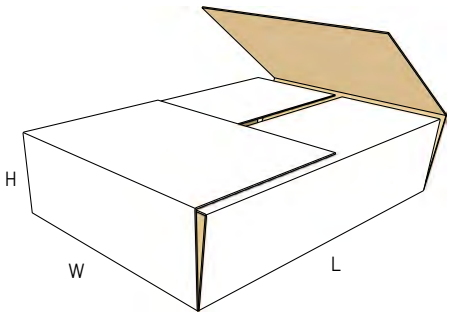

0403 M

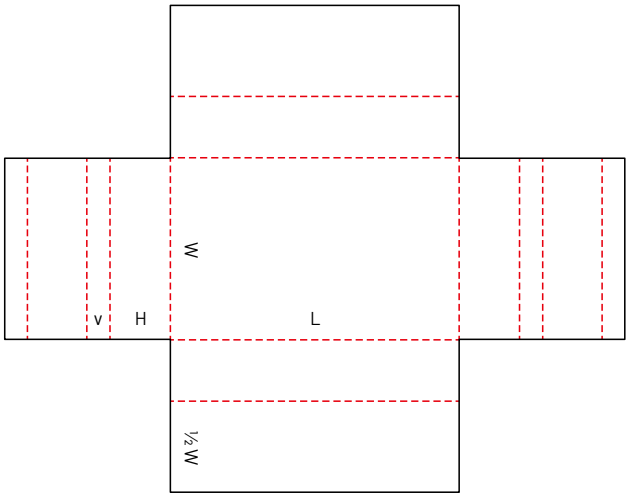

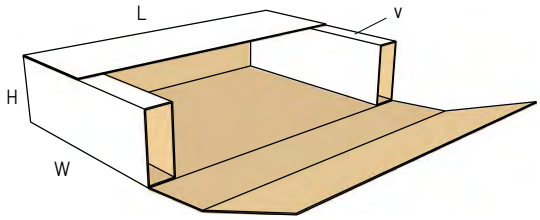

0404 M

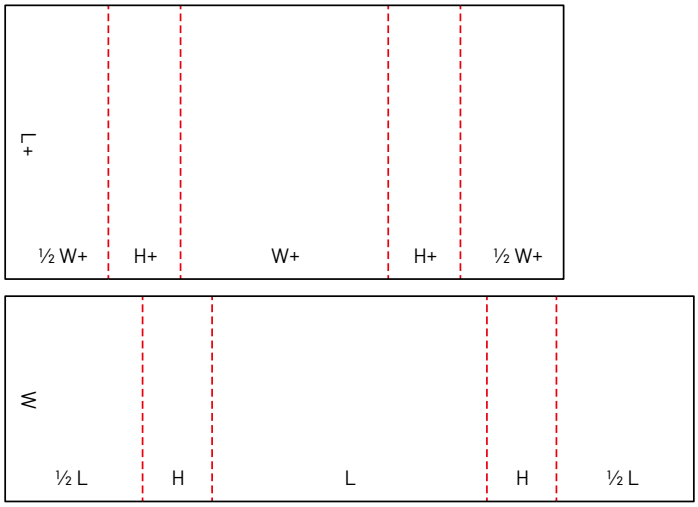

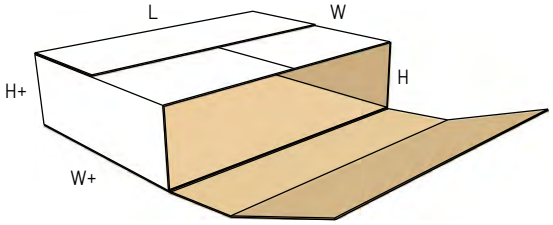

0405 M

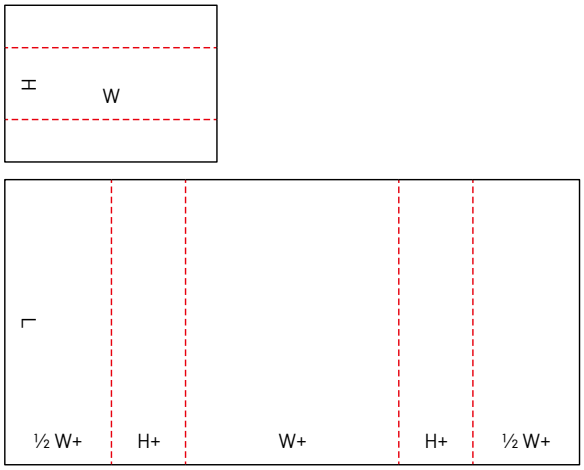

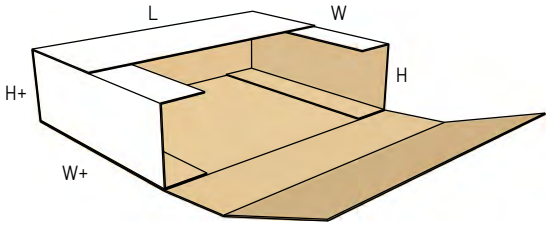

0406 A

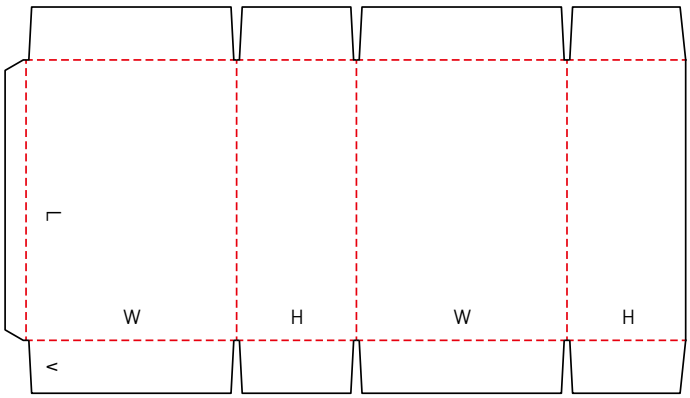

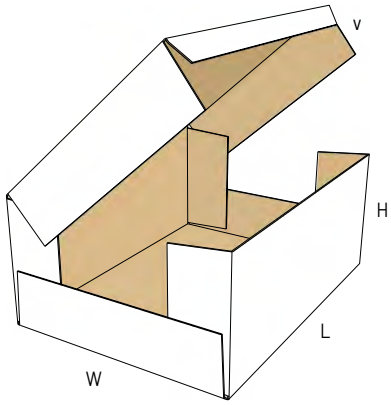

0407 M

NEW

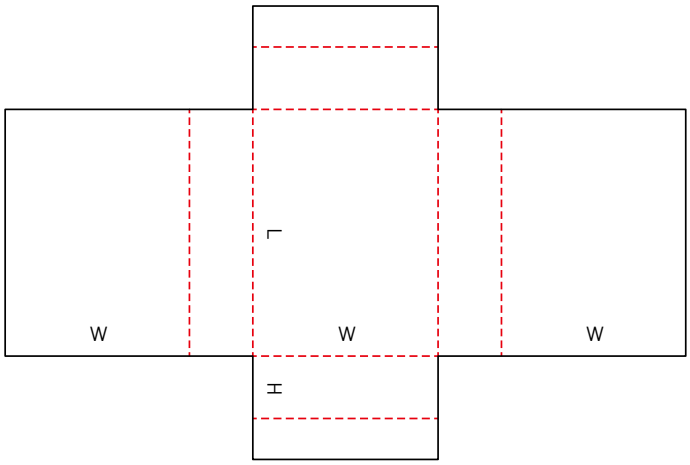

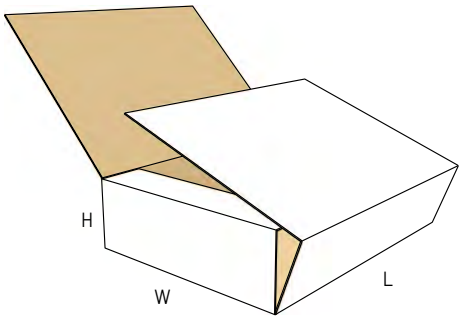

0409 M/A

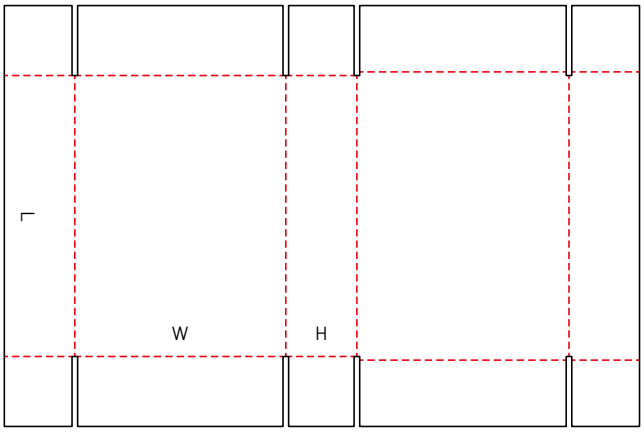

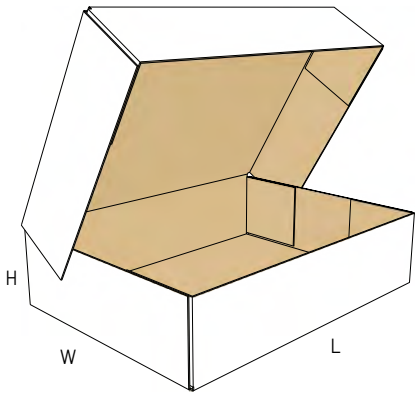

0410 M/A

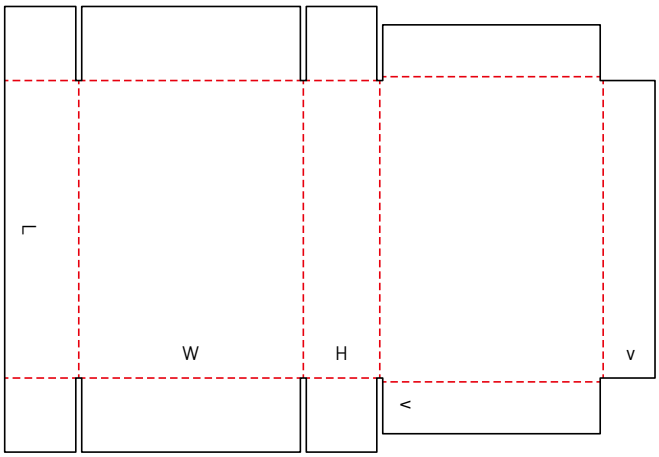

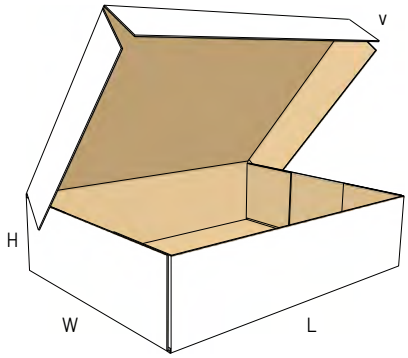

0411 M/A

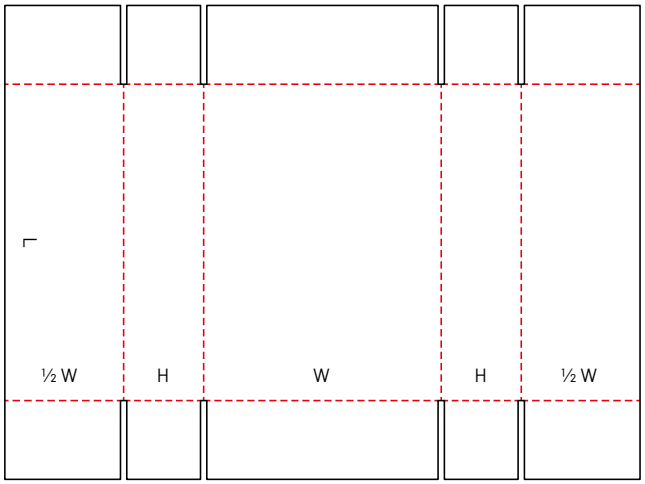

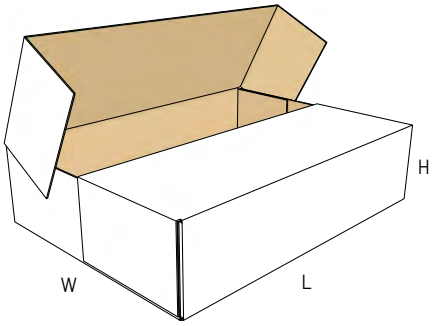

0412 M

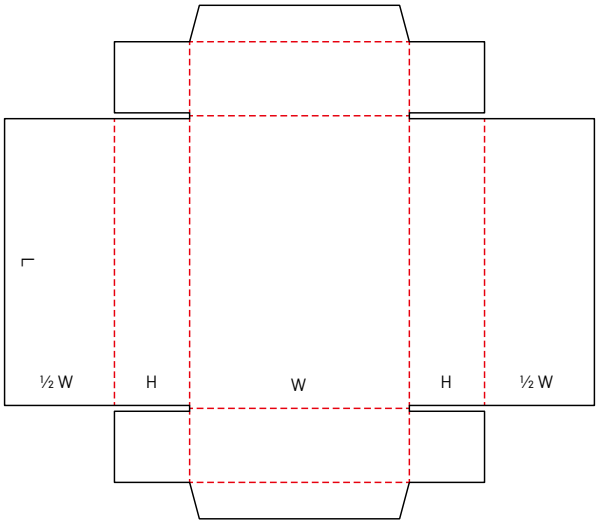

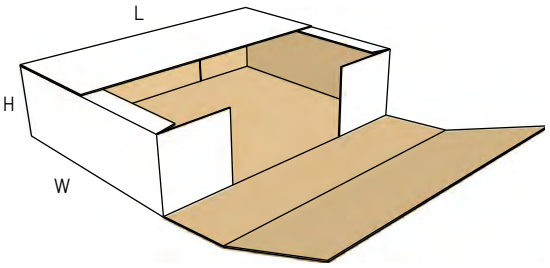

0413 M/A

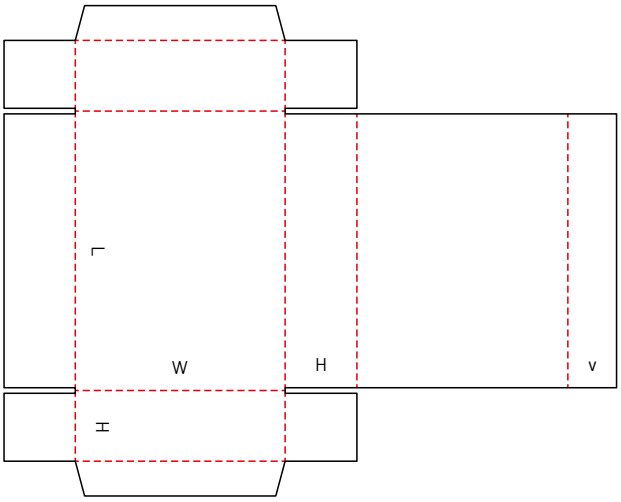

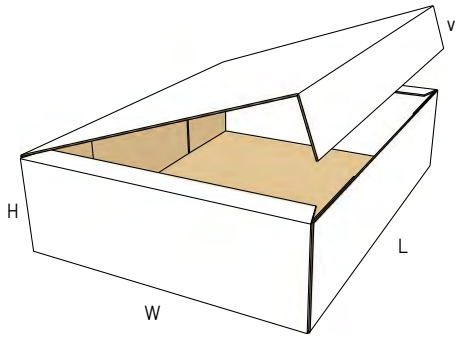

0414 M

NEW

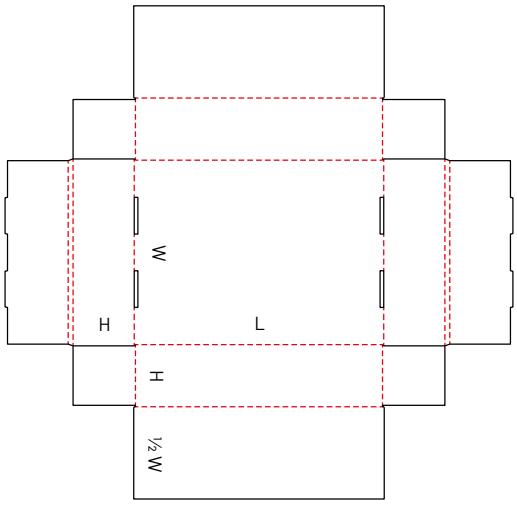

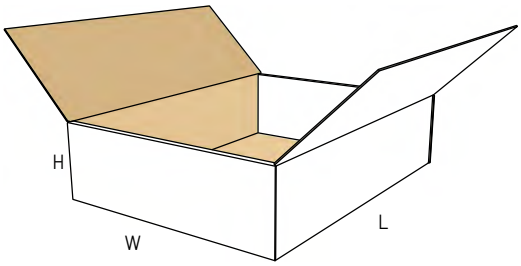

0415 M/A

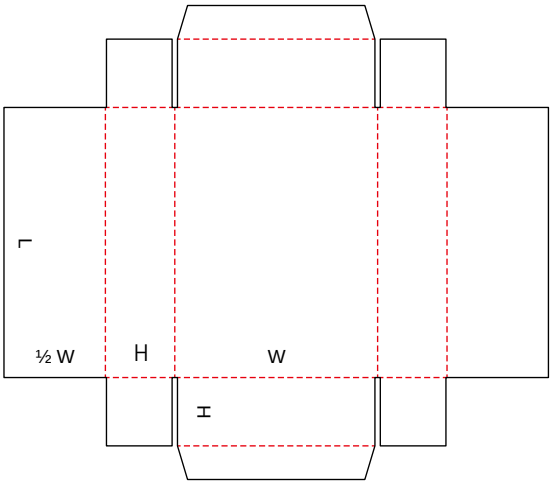

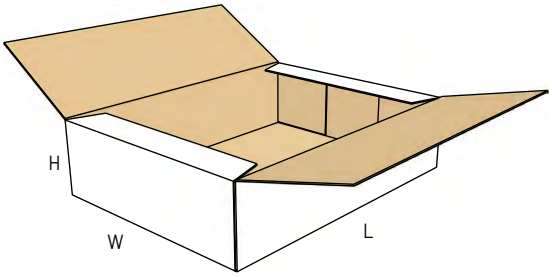

0416 M

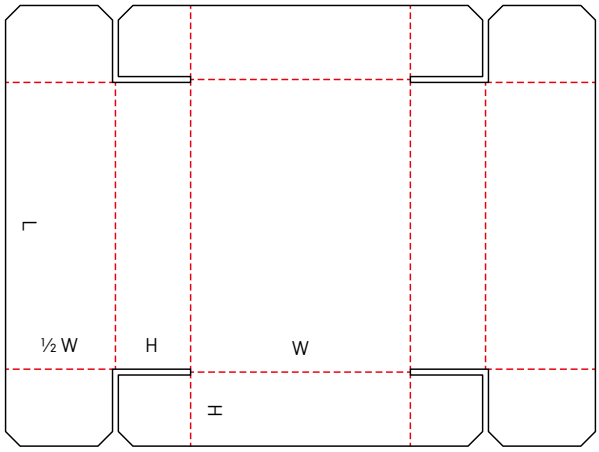

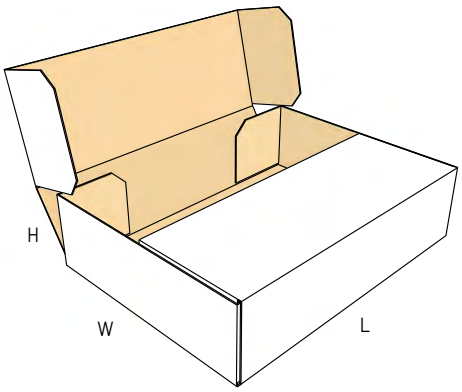

0418 M

NEW

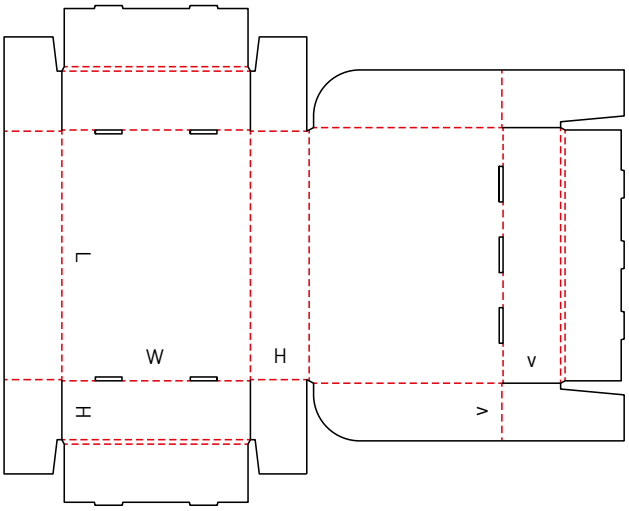

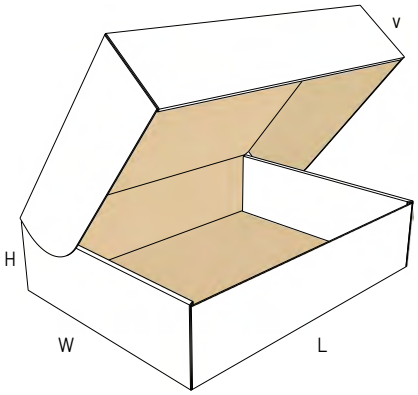

0420 M/A

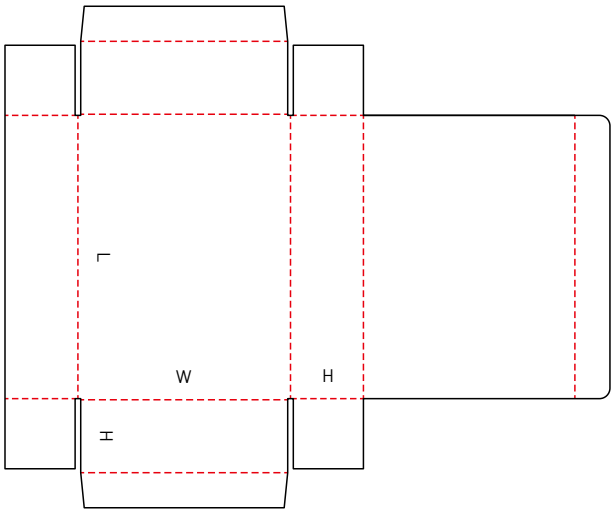

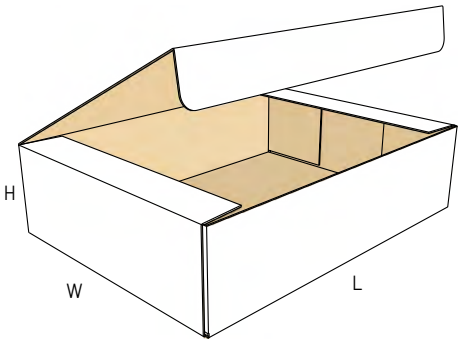

0421 M/A

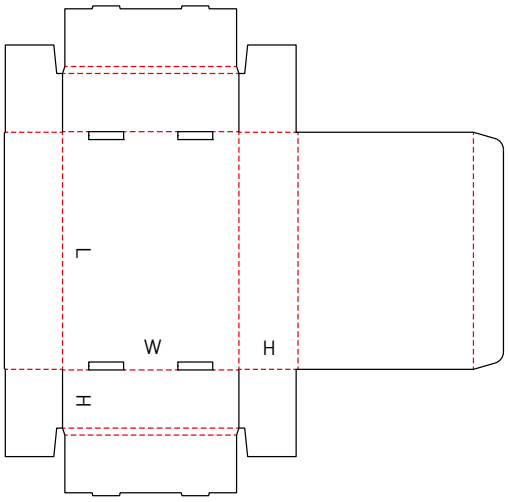

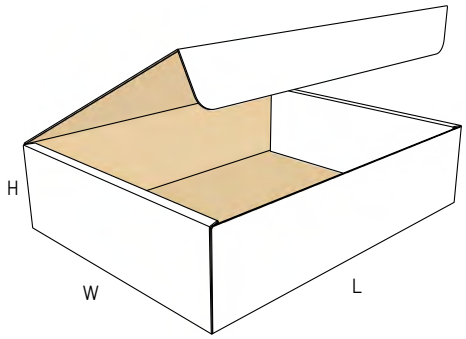

0422 M/A

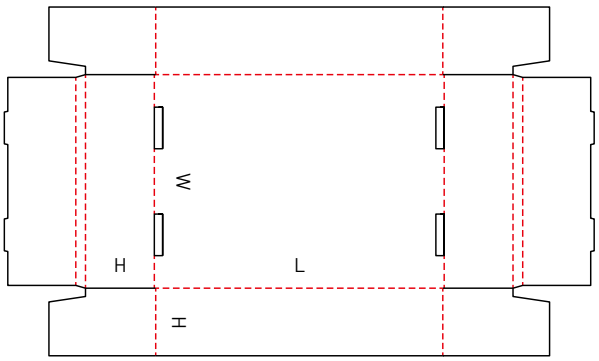

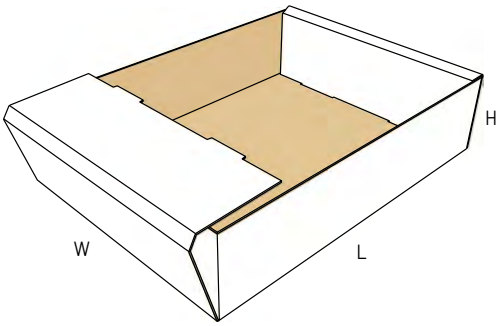

0423 M/A

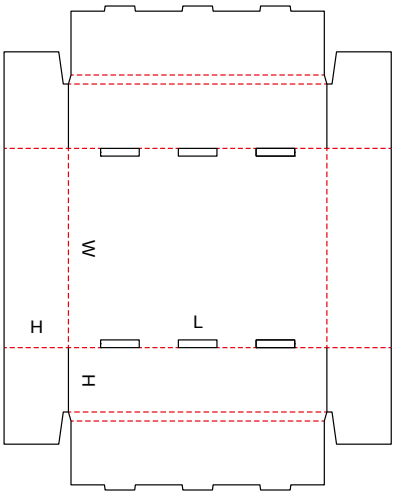

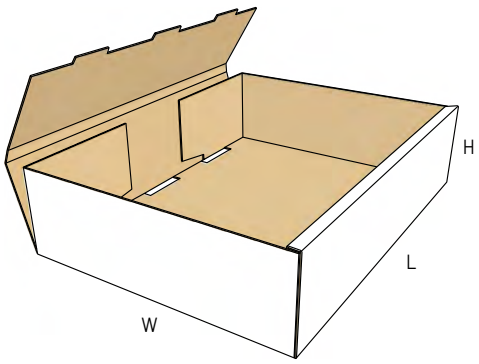

0424 M/A

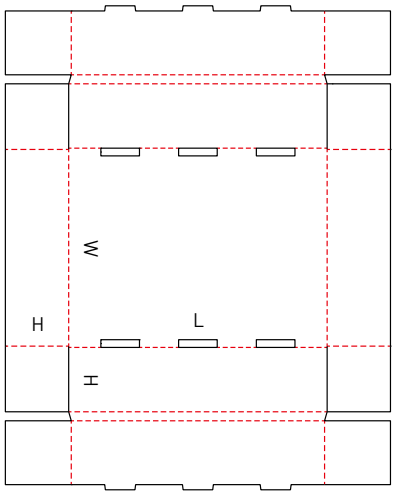

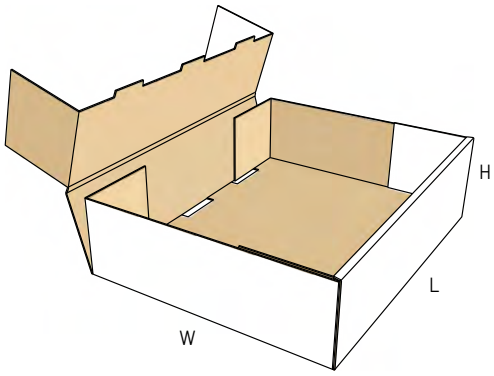

0425 M/A

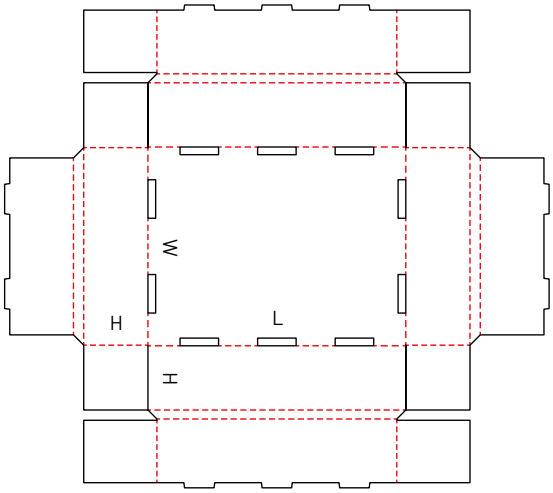

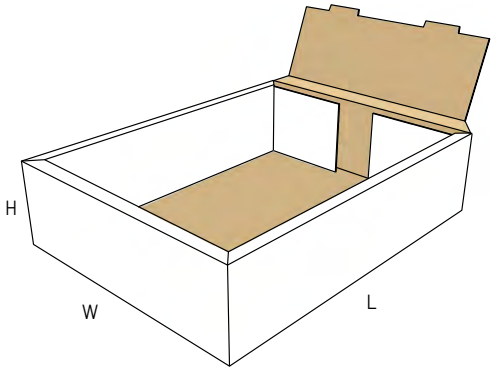

0425.1 M/A

NEW

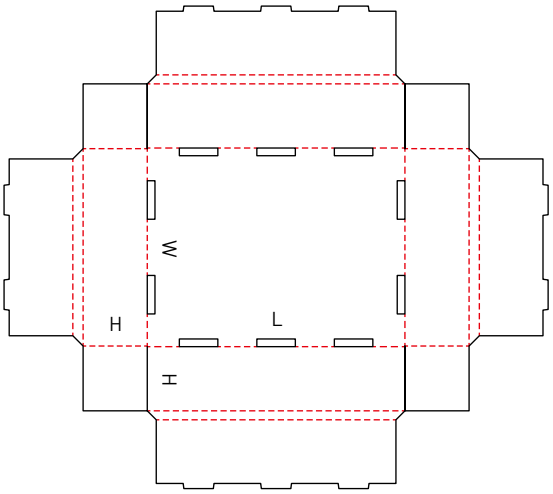

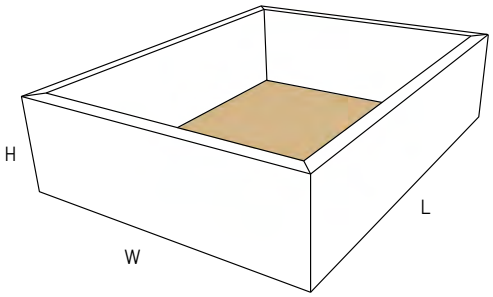

0426 M

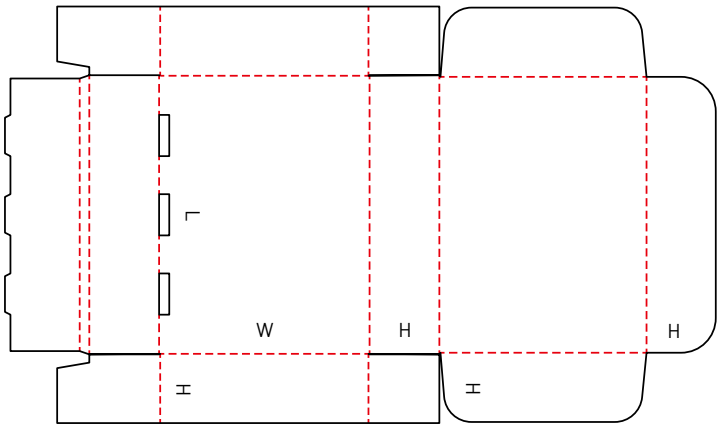

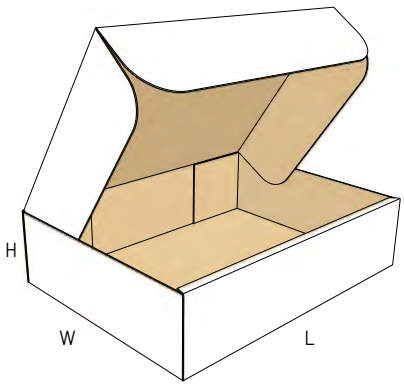

0427 M

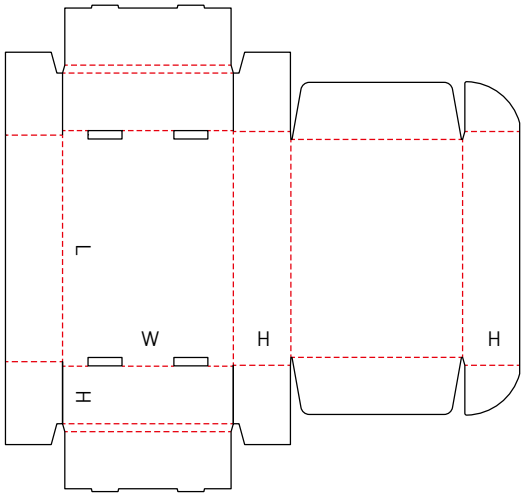

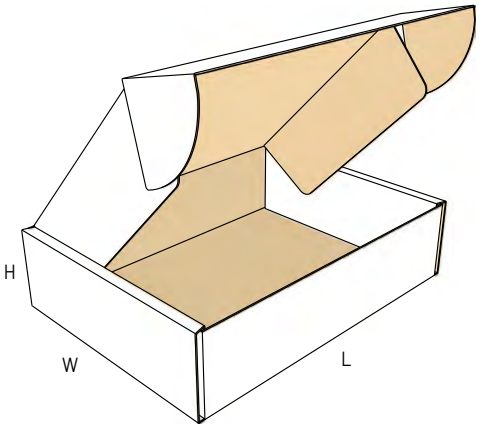

0427.1 M

NEW

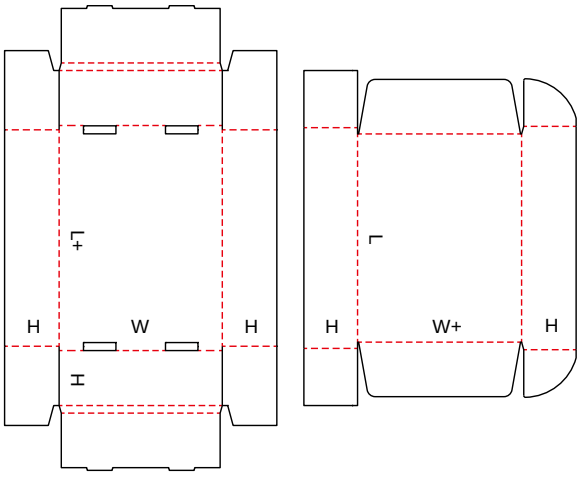

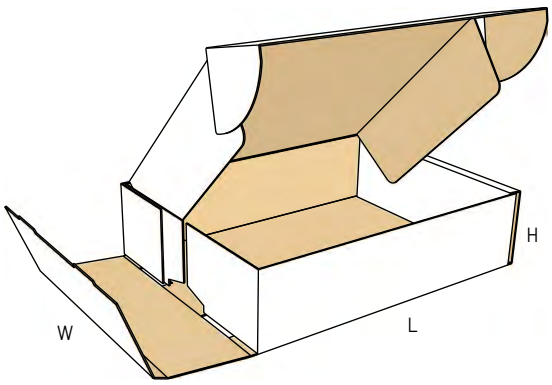

0428 M

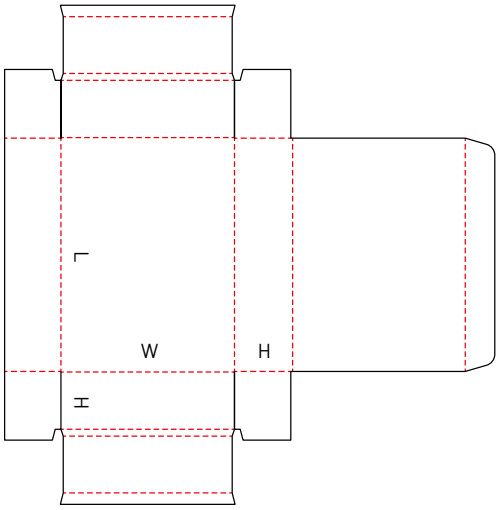

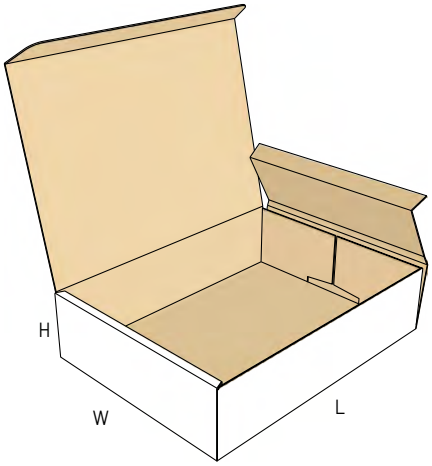

0429 M

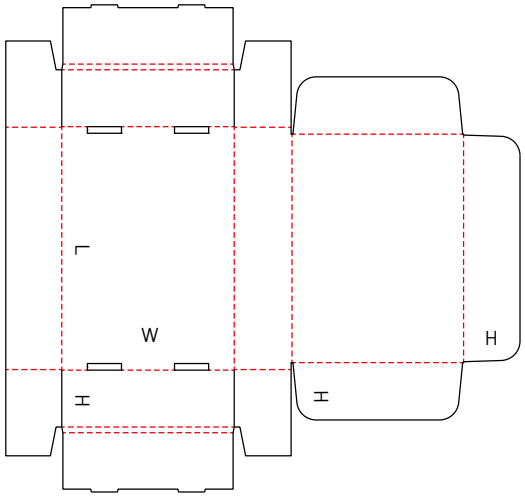

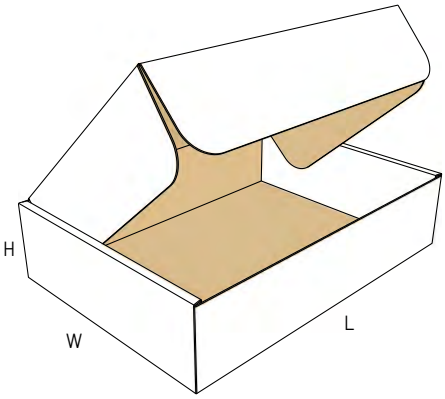

0430 M/A

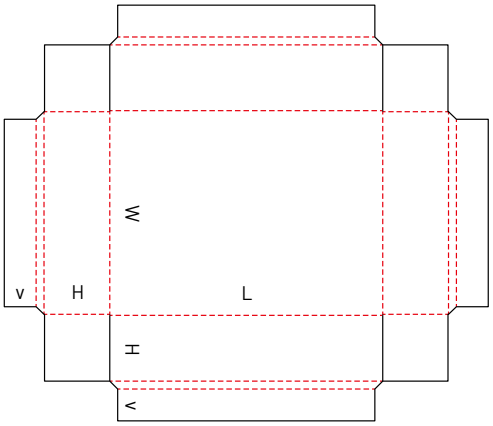

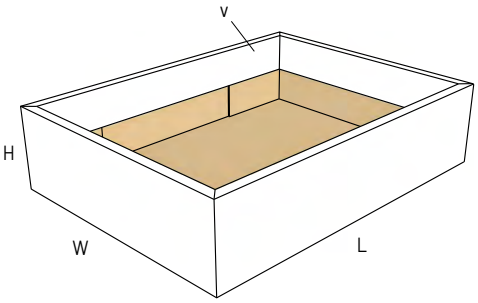

0431 M

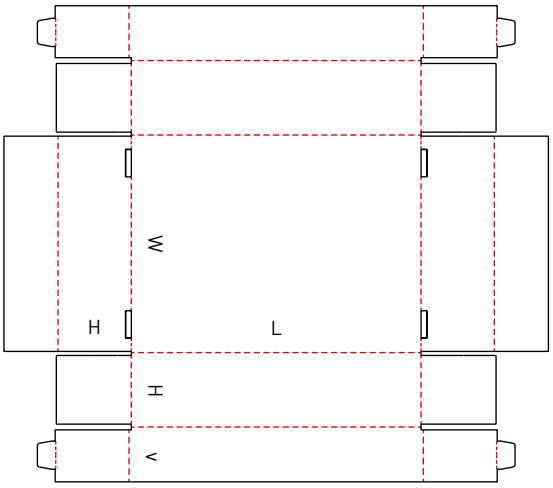

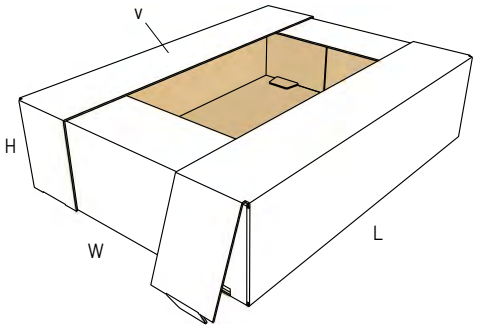

0432 M

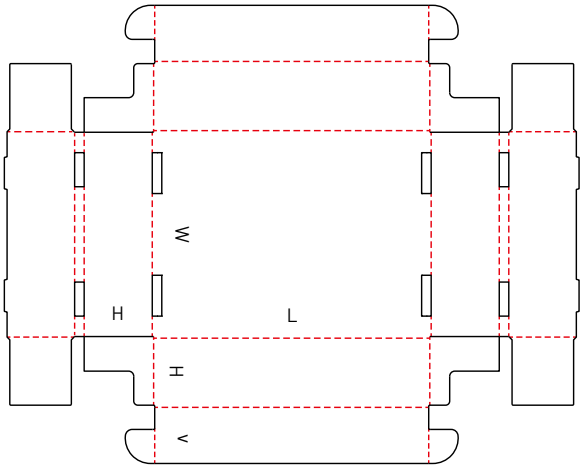

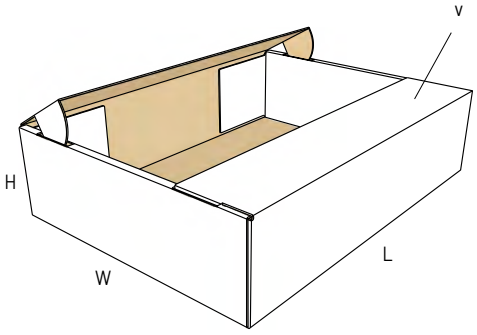

0433 M

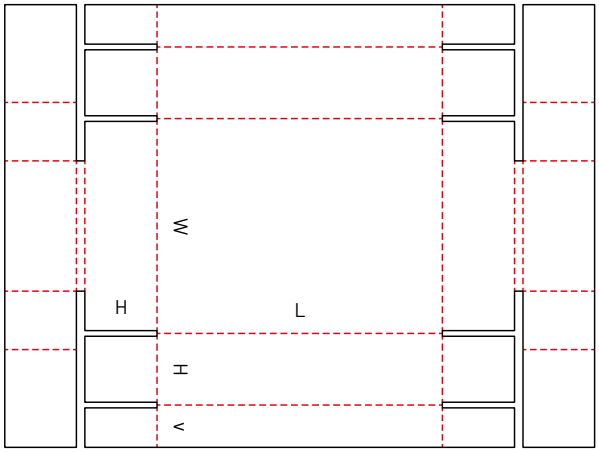

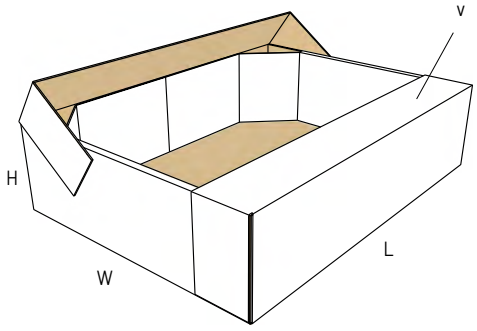

0434 A

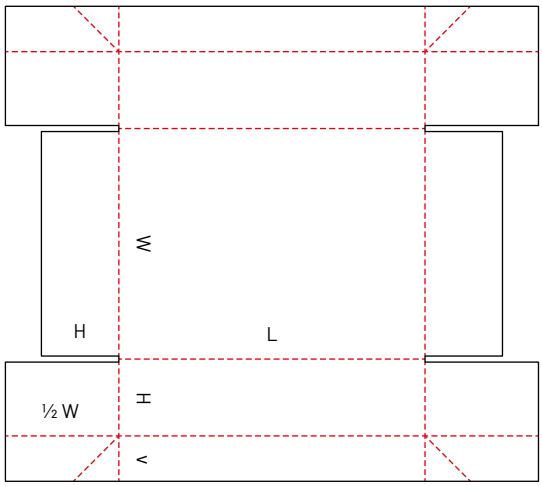

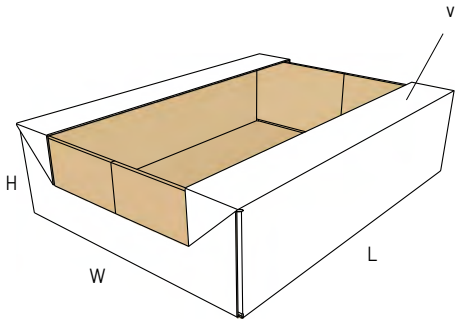

0435 M/A

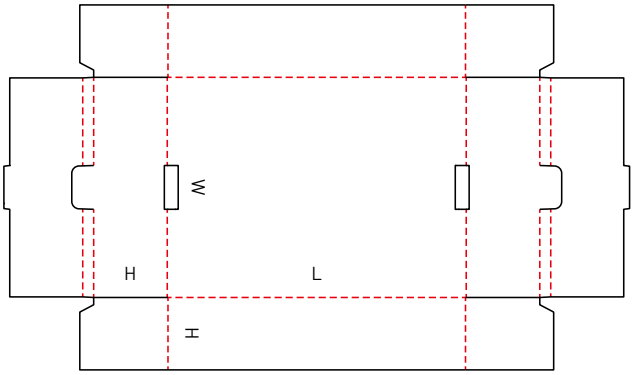

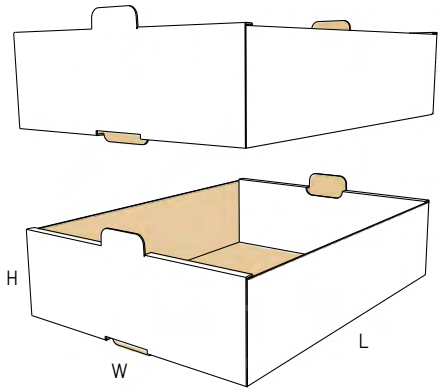

0435.1 M/A

NEW

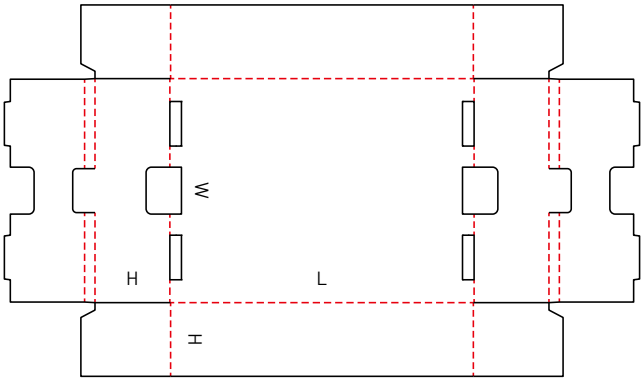

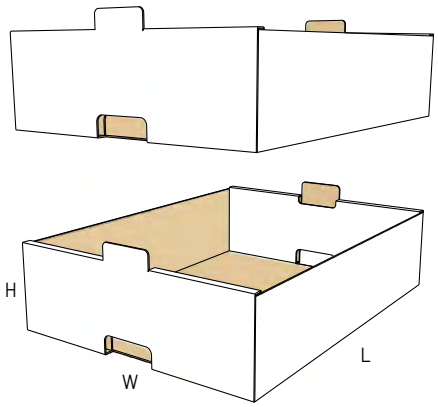

0436 M

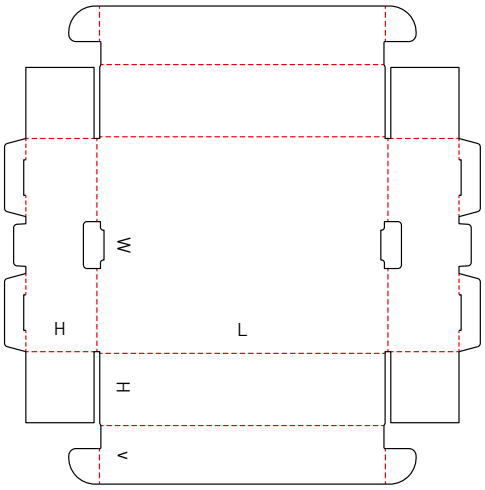

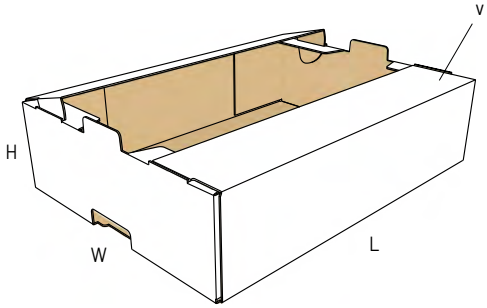

0436.1 A

NEW

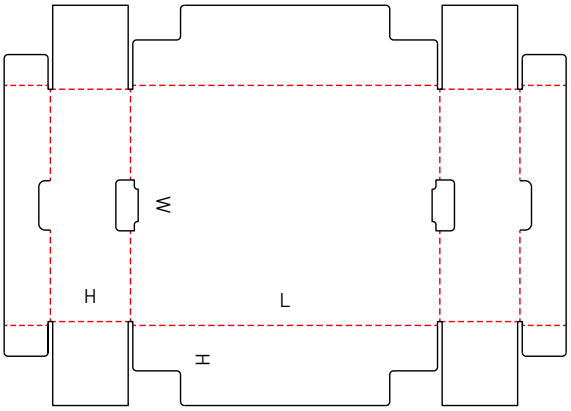

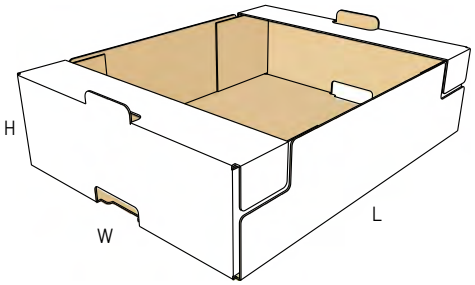

0436.2 A

NEW

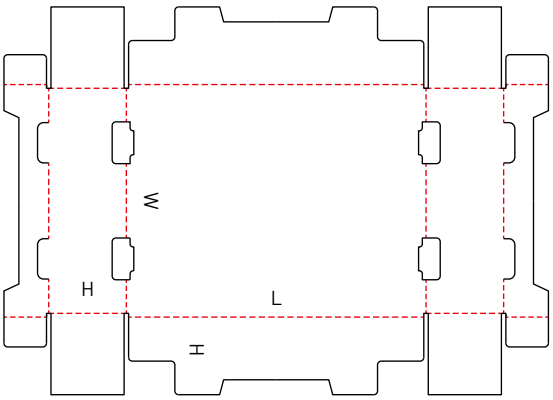

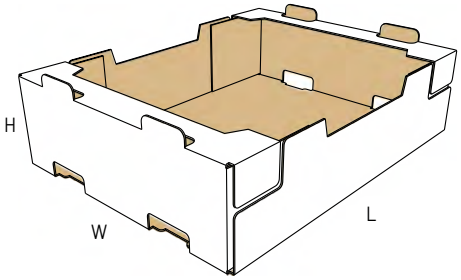

0437 M

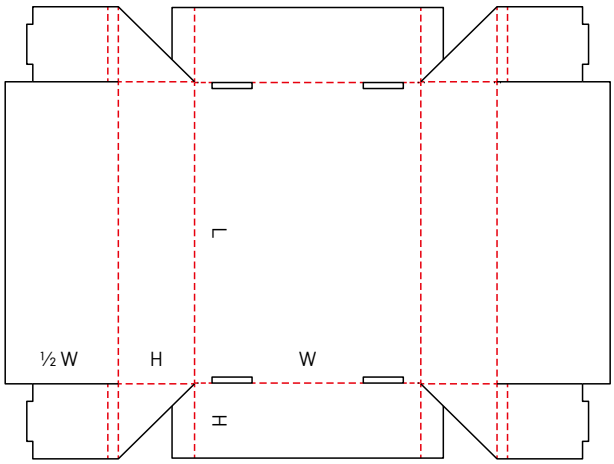

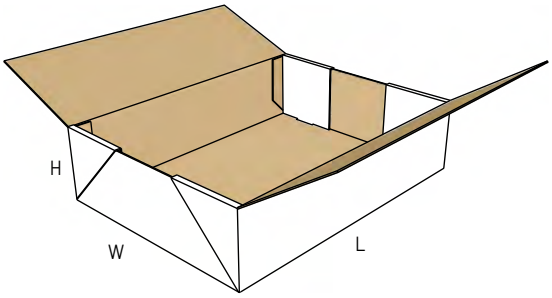

0438 A

NEW

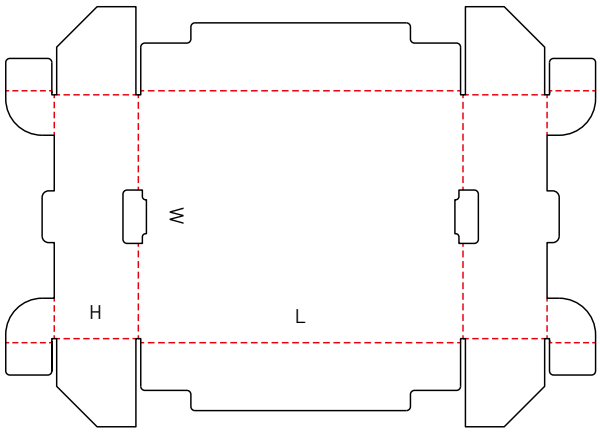

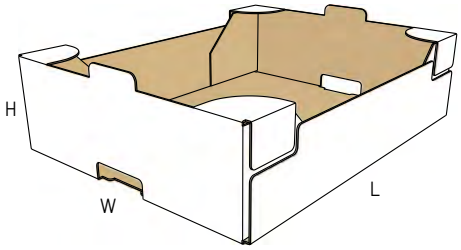

0439 M

NEW

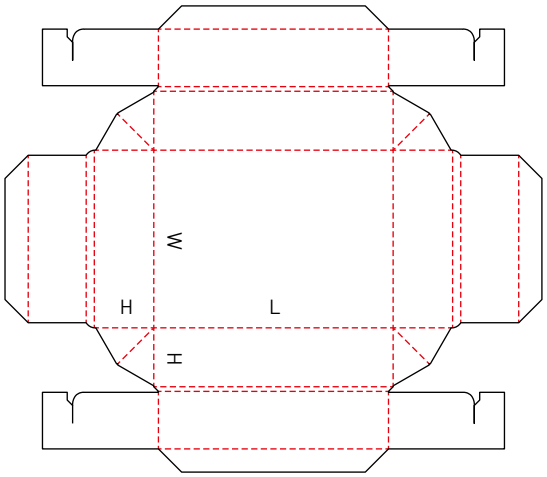

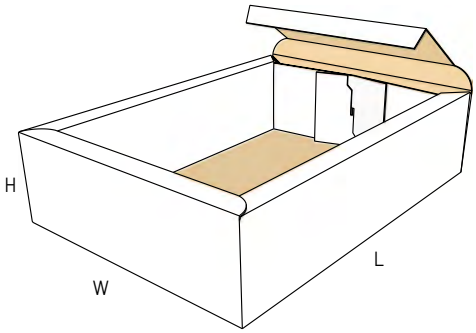

0440 A

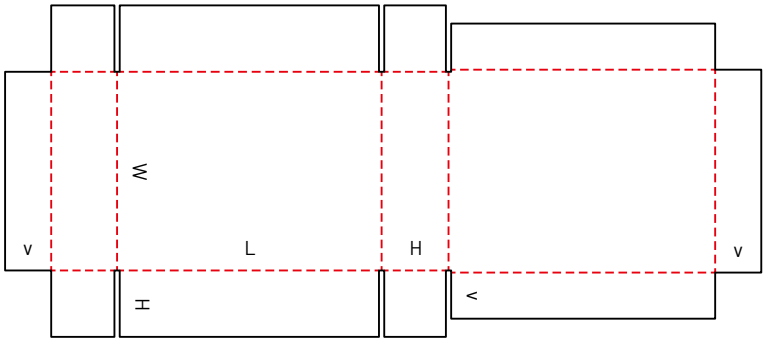

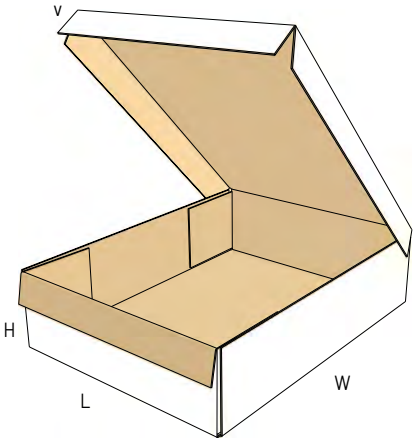

0441 A

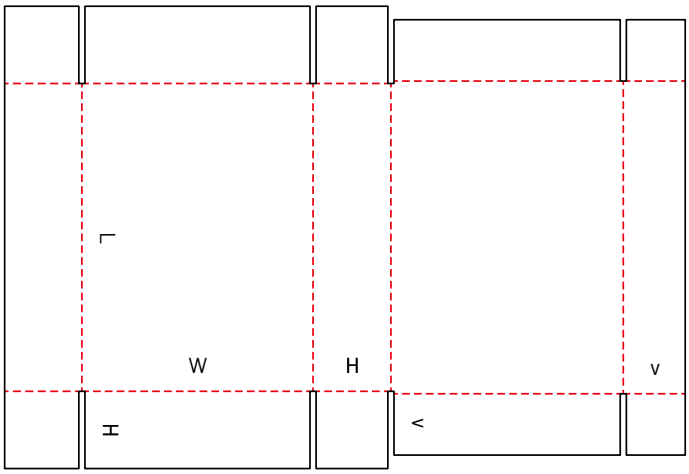

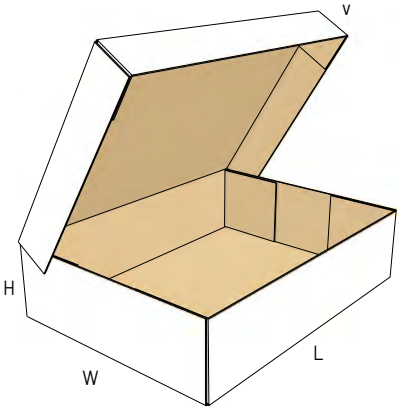

0442 M

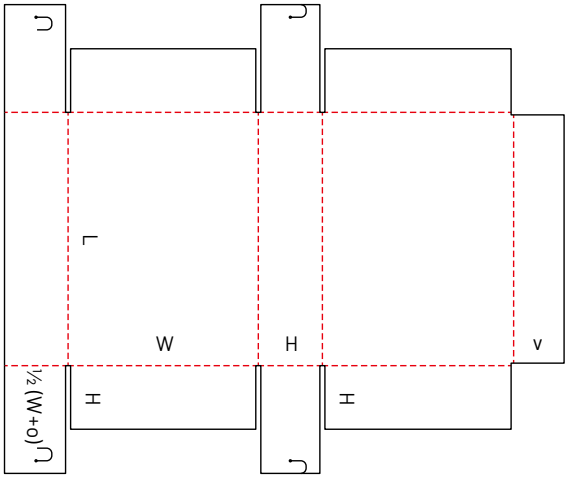

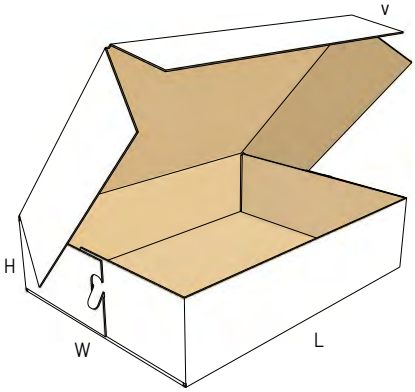

0443 M

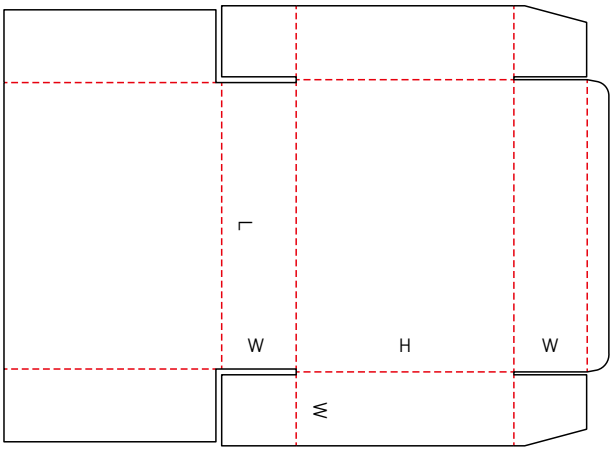

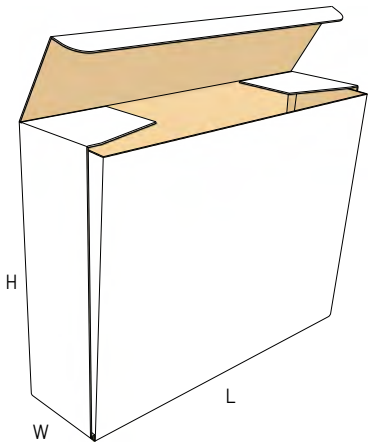

0444 M

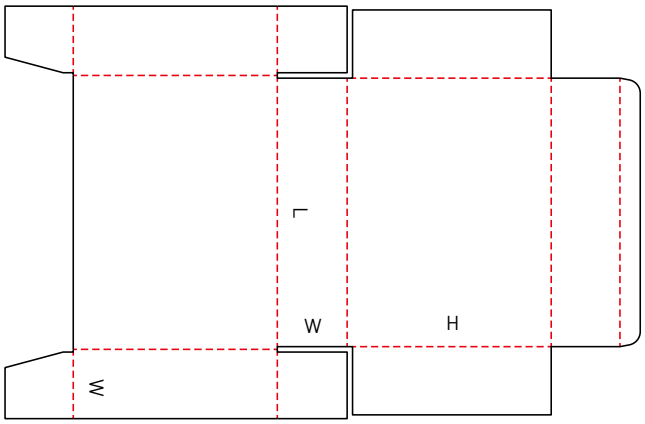

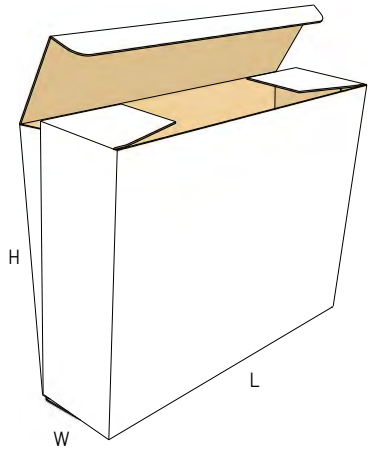

0445 M

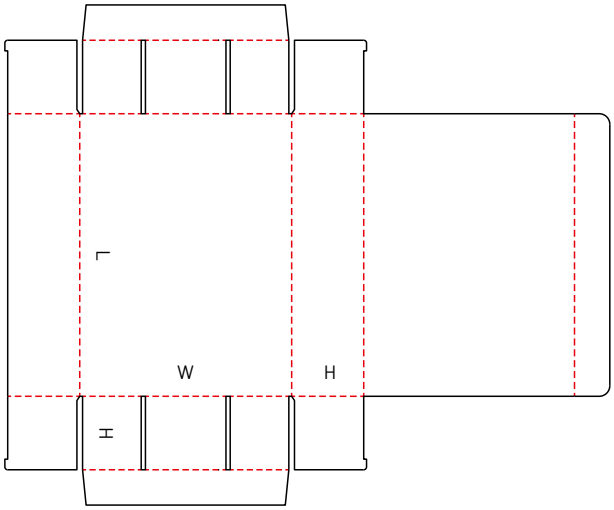

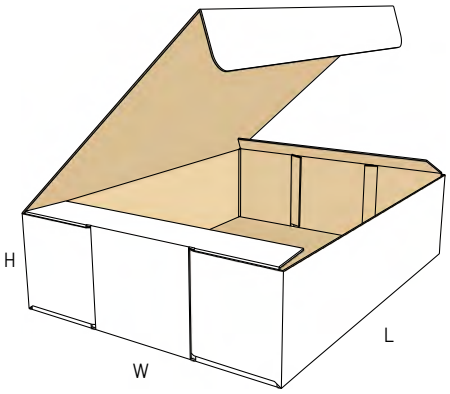

0446 A

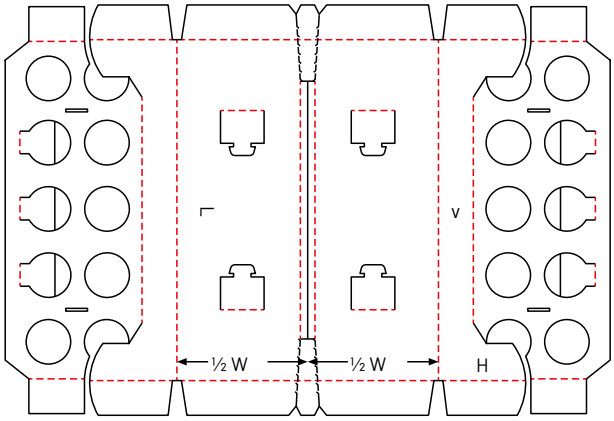

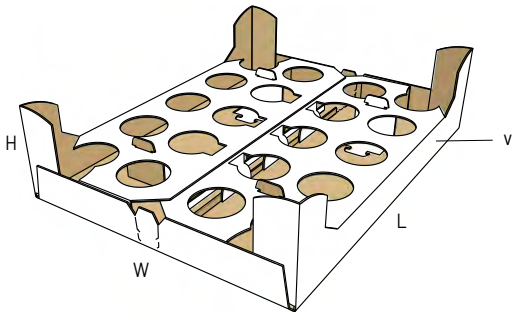

0447 M

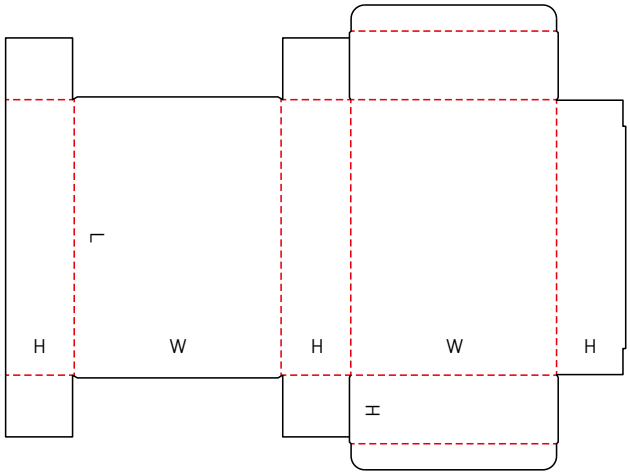

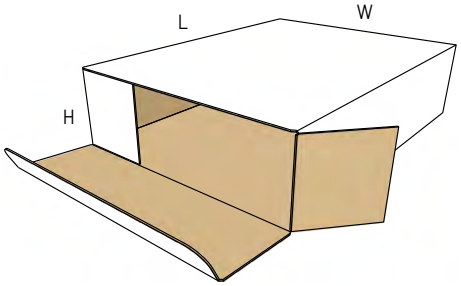

0448 M

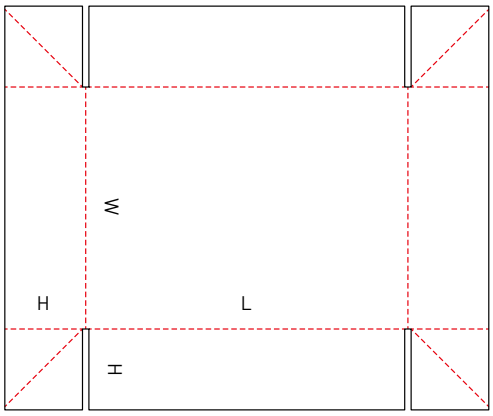

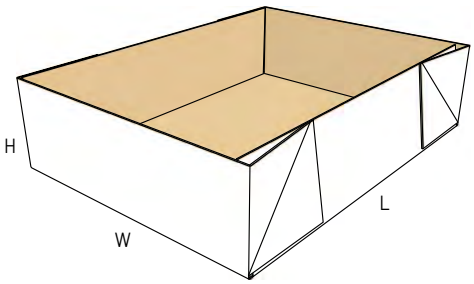

0449 M

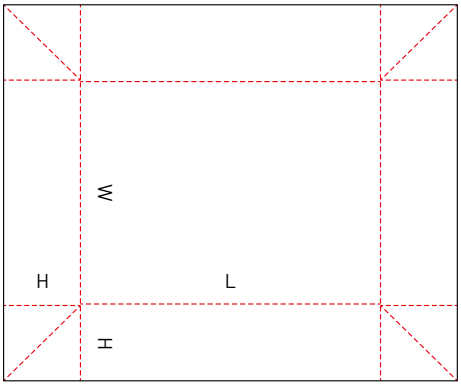

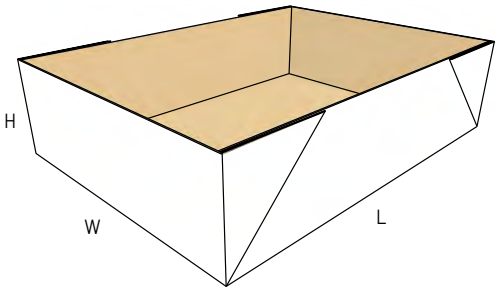

0449.1 M

NEW

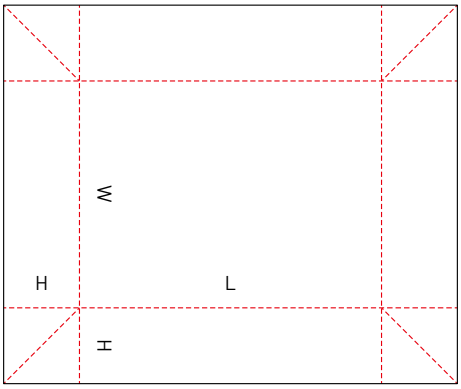

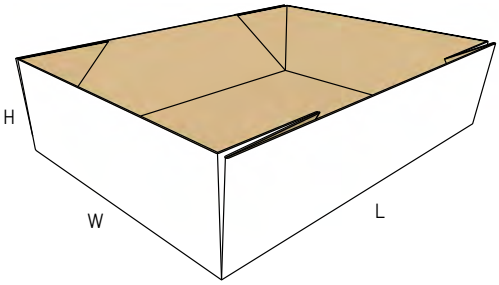

0450 M

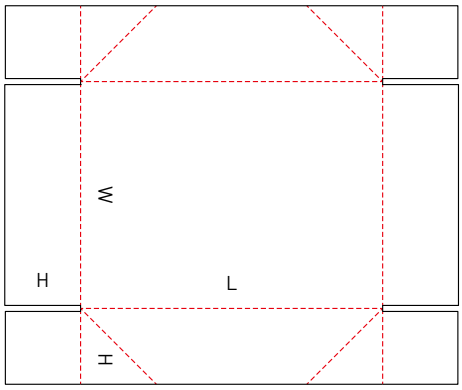

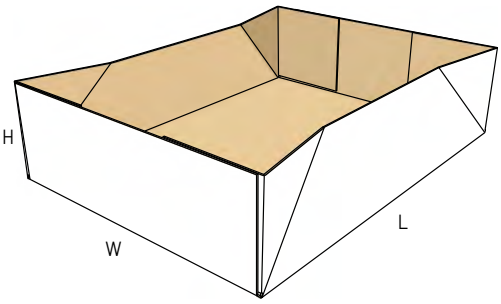

0451 M

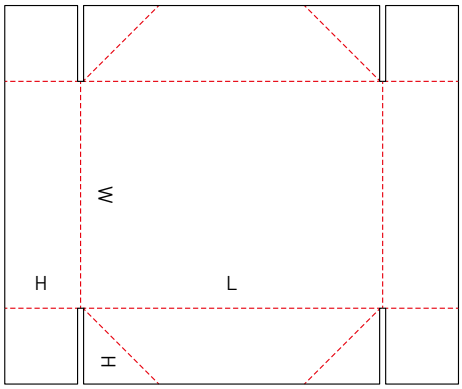

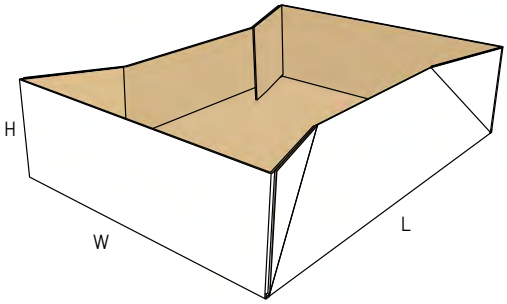

0451.1 M

NEW

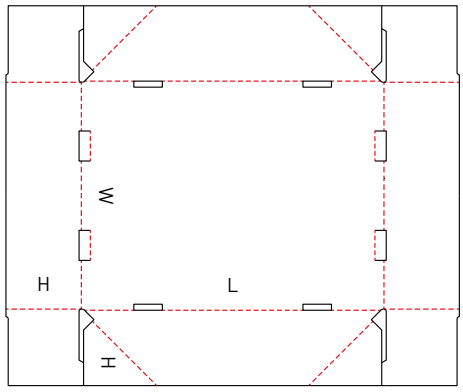

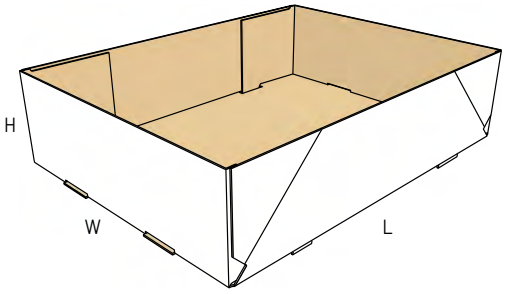

0452 A

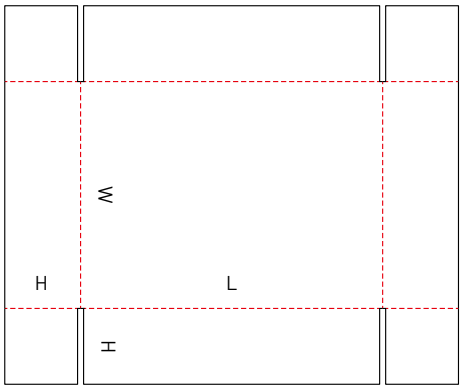

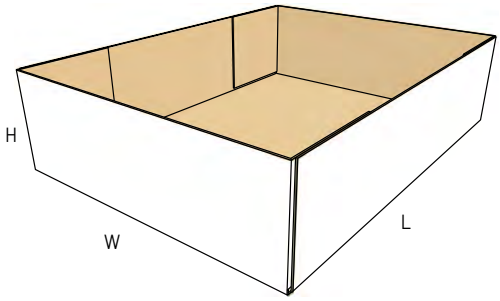

0453 A

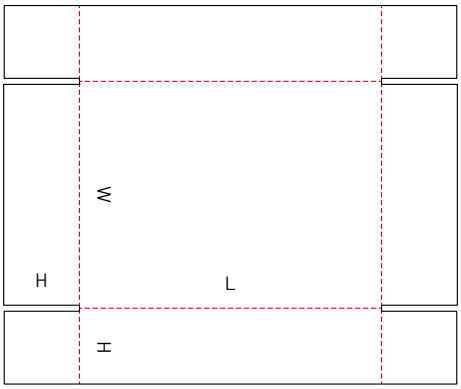

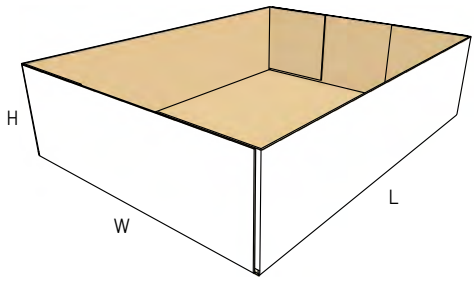

0454 M

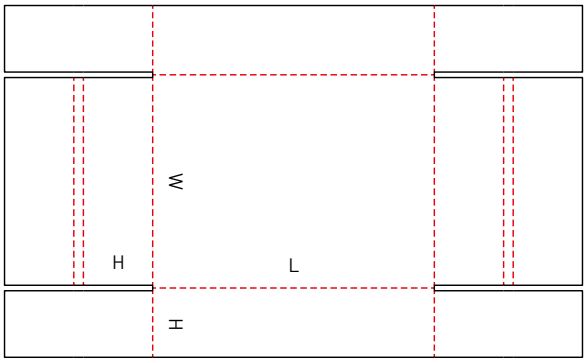

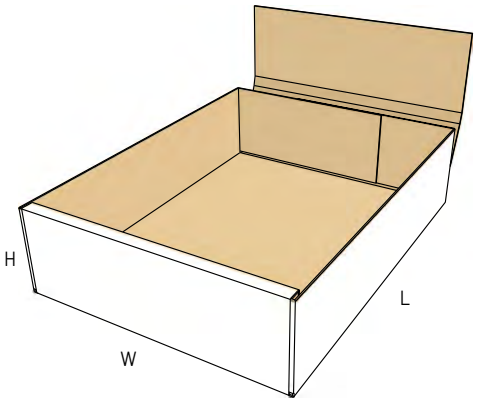

0455 M

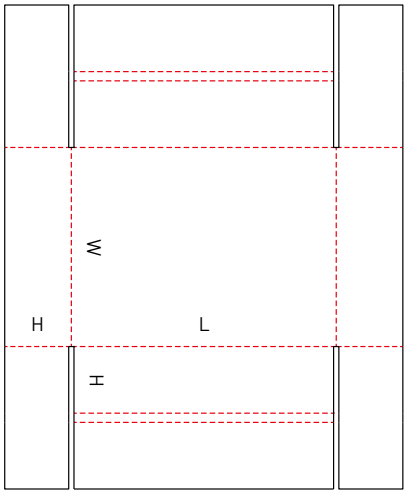

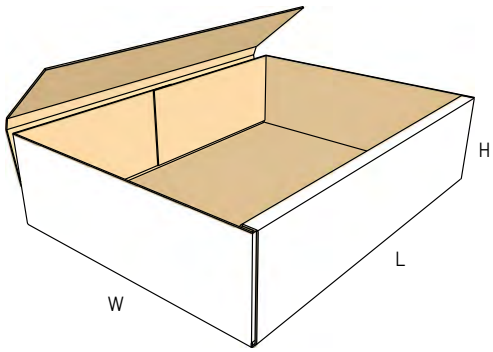

0456 M

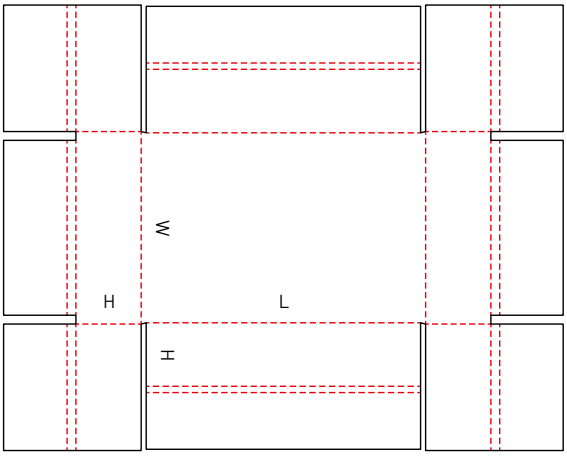

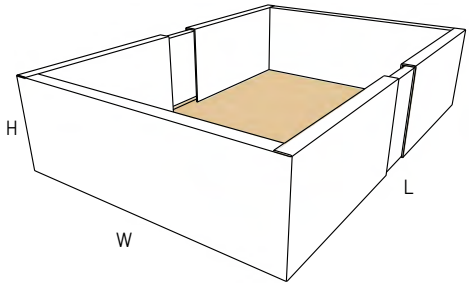

0457 M

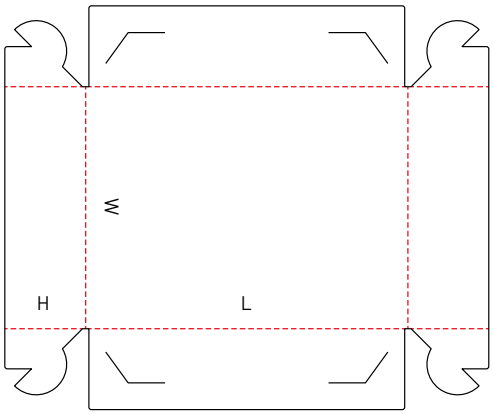

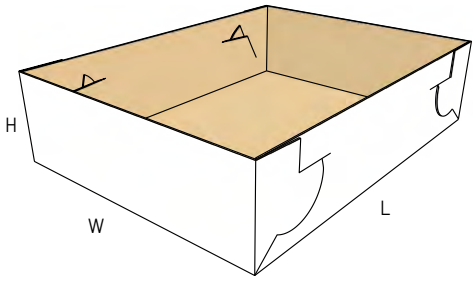

0458 M

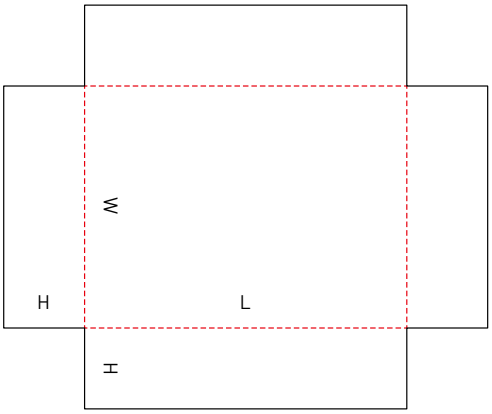

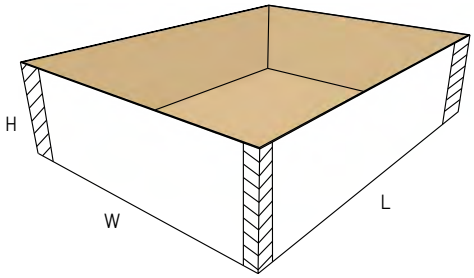

0459 A

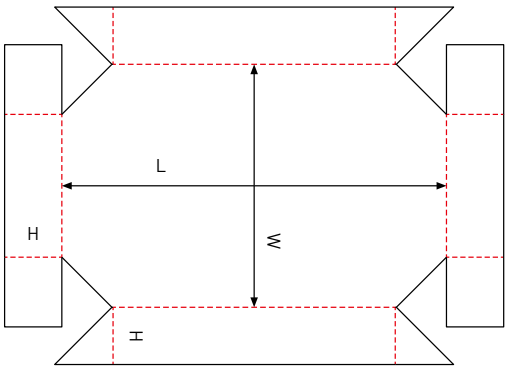

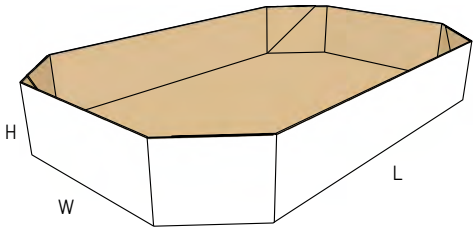

0459.1 A

NEW

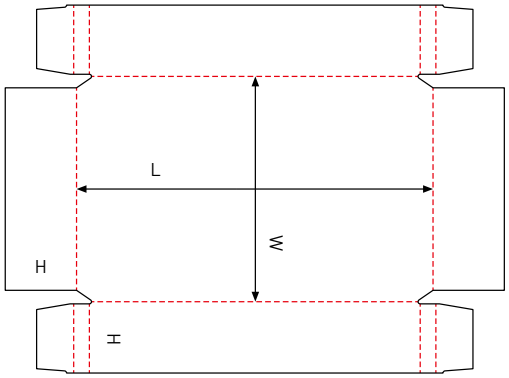

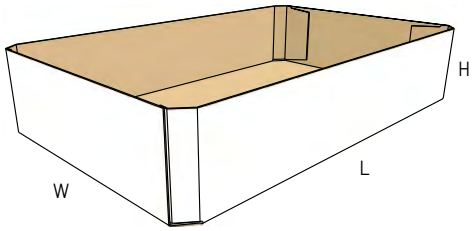

0460 A

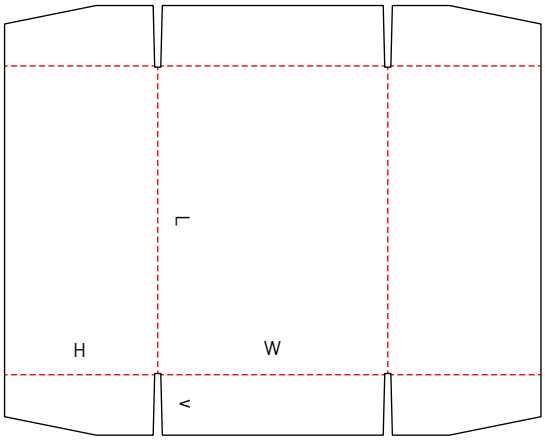

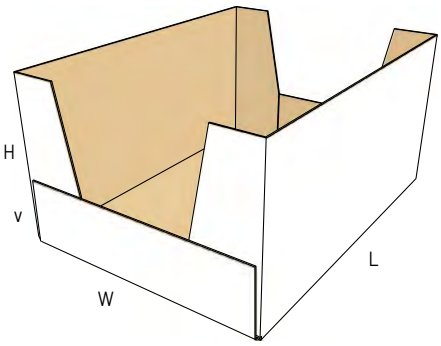

0461 M/A

NEW

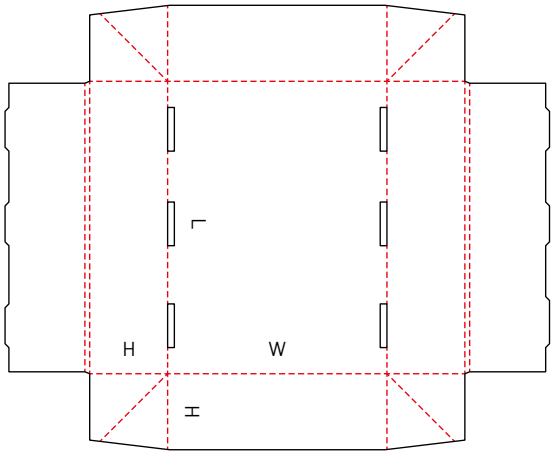

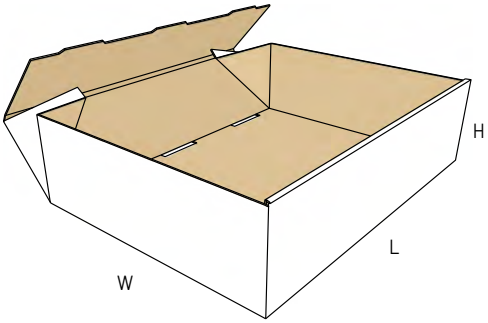

0462 M

NEW

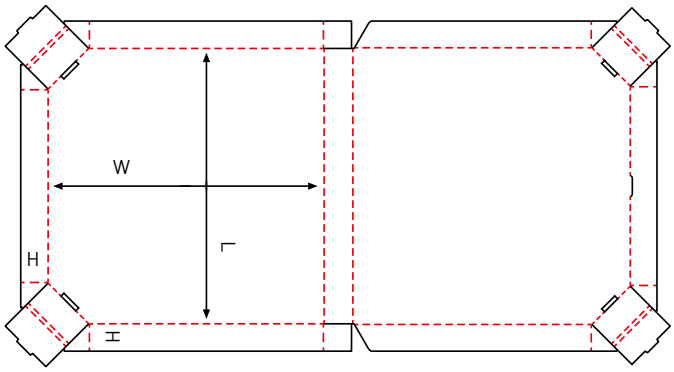

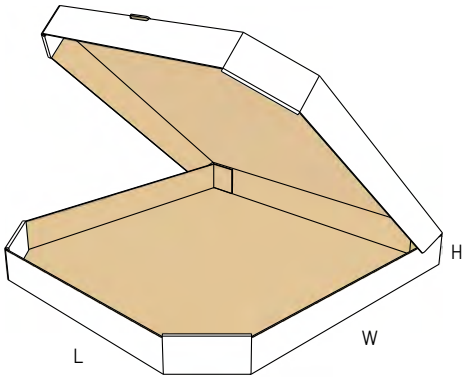

0463 M

NEW

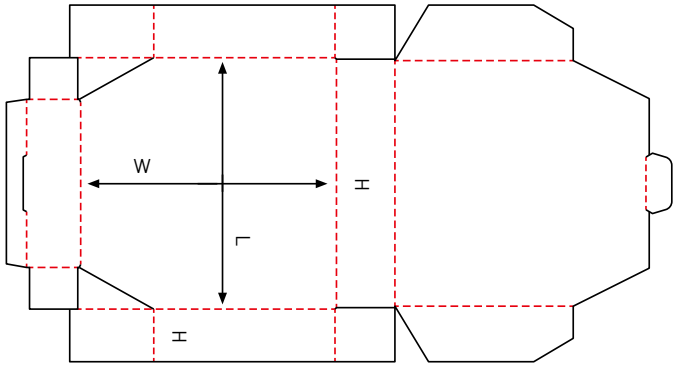

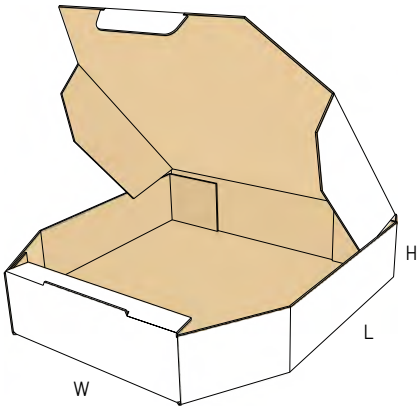

0464 M

NEW

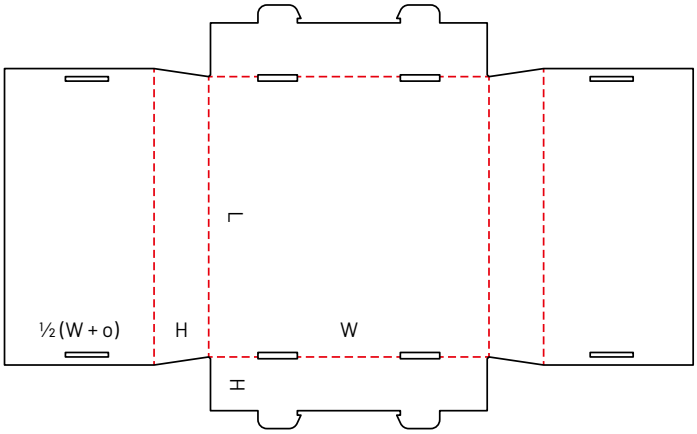

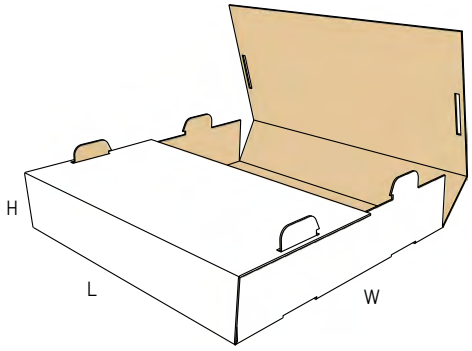

0465 M

NEW

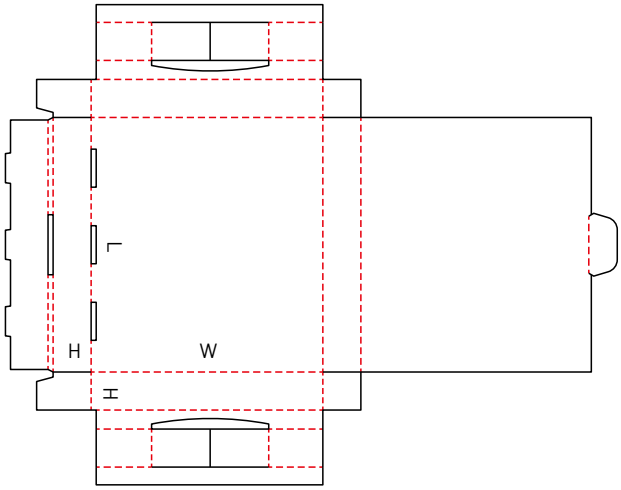

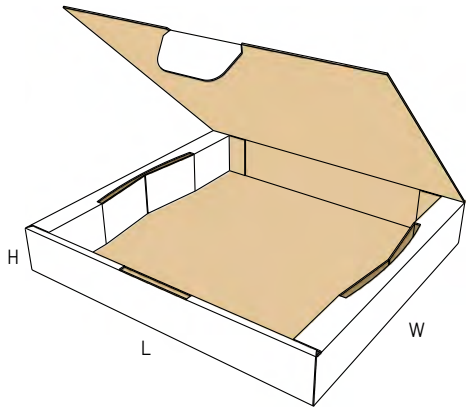

0466 M

NEW

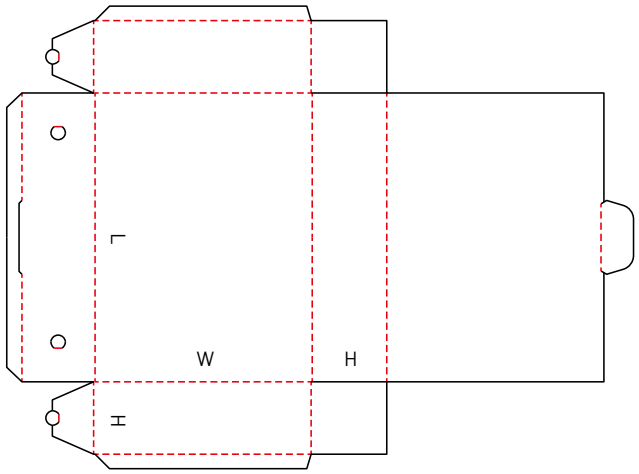

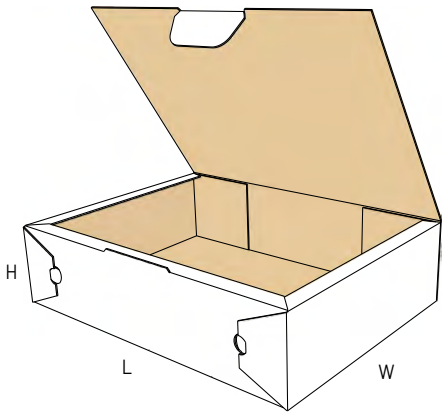

0469 M

NEW

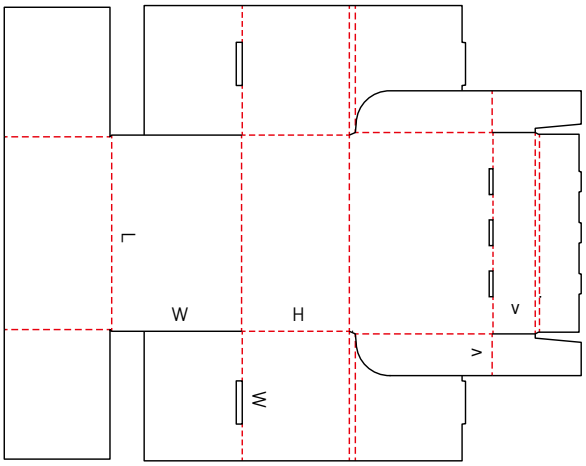

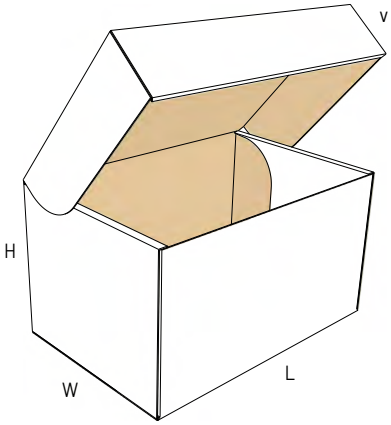

0470 M

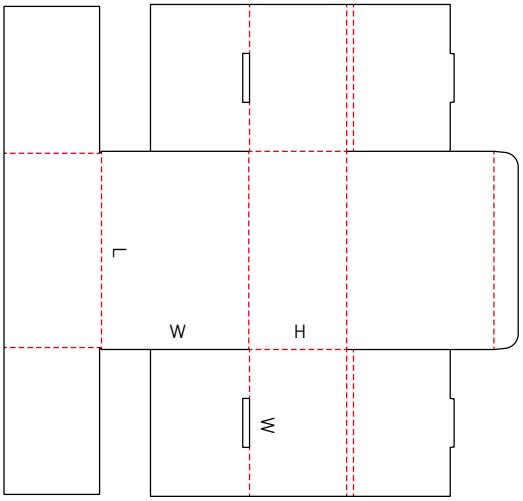

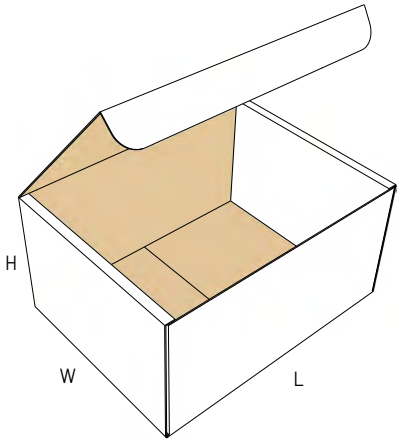

0471 M

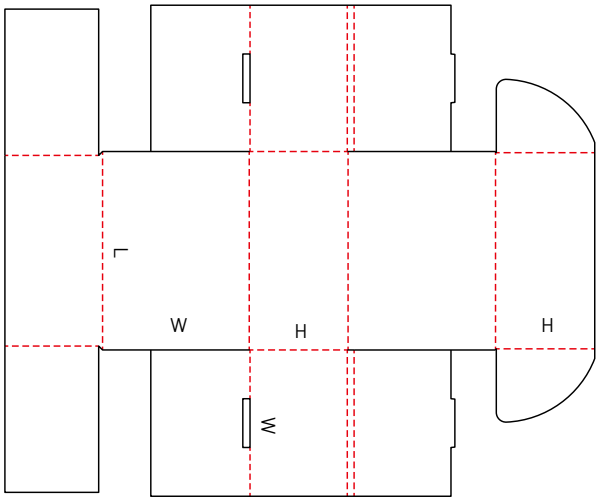

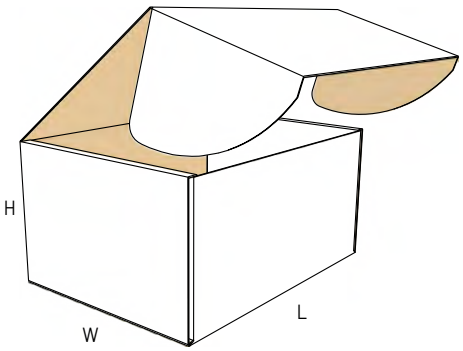

0472 M

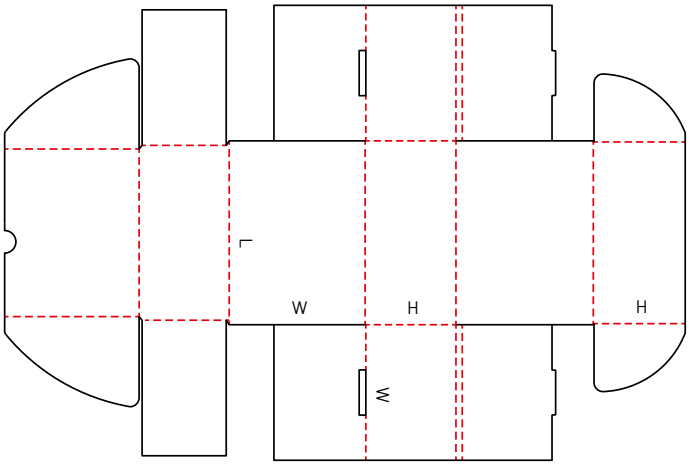

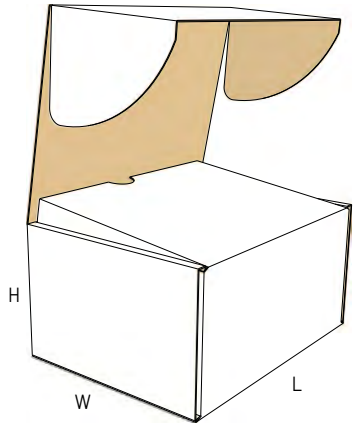

0473 M

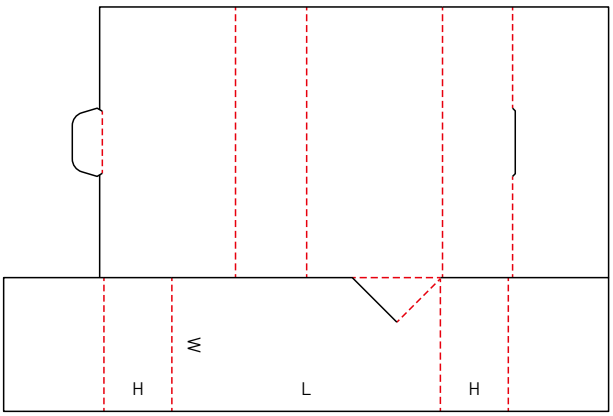

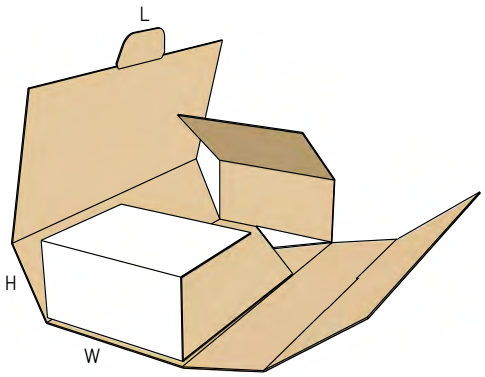

0474 M

NEW

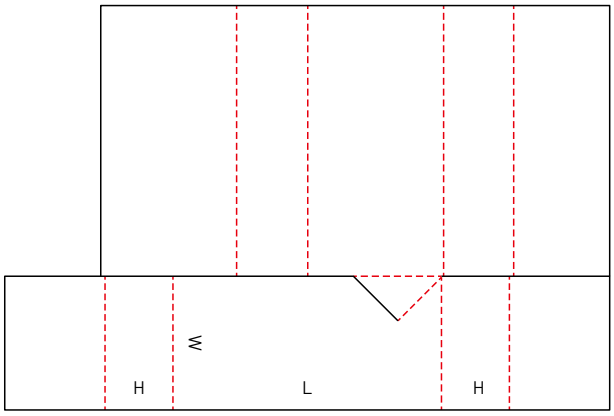

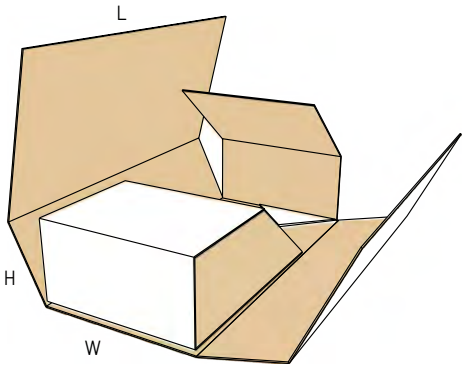

0475 M

NEW

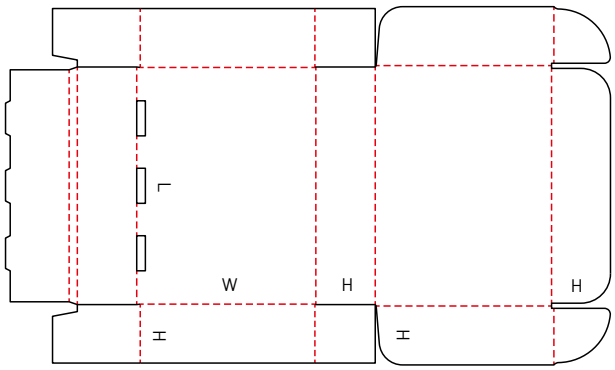

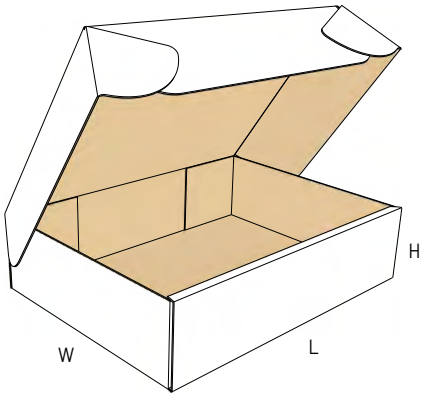

0476 M

NEW

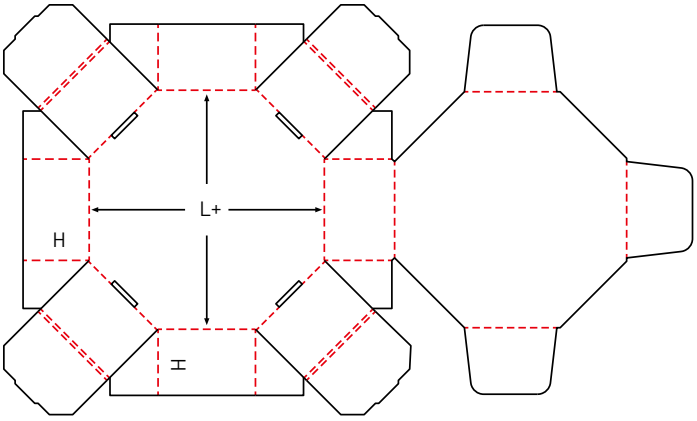

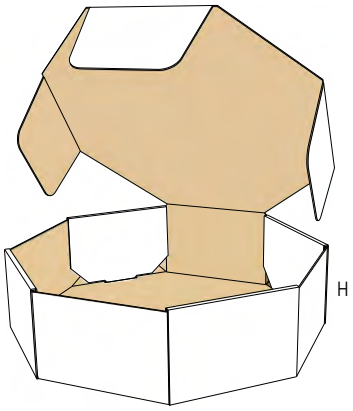

0480 A

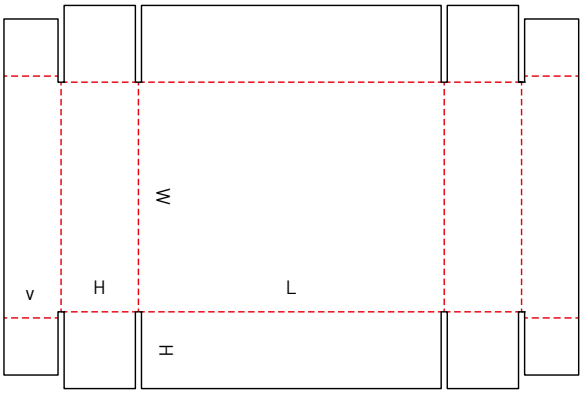

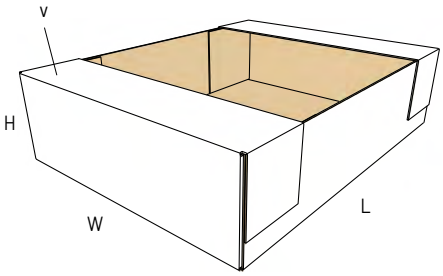

0481 M

NEW

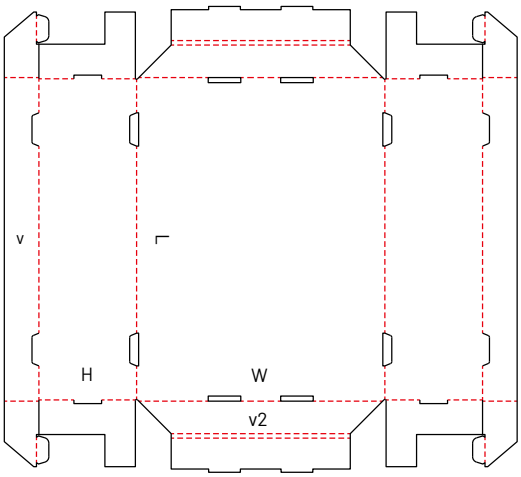

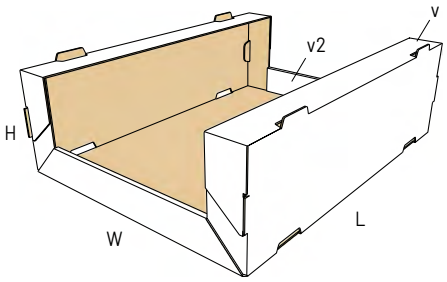

0482 M

NEW

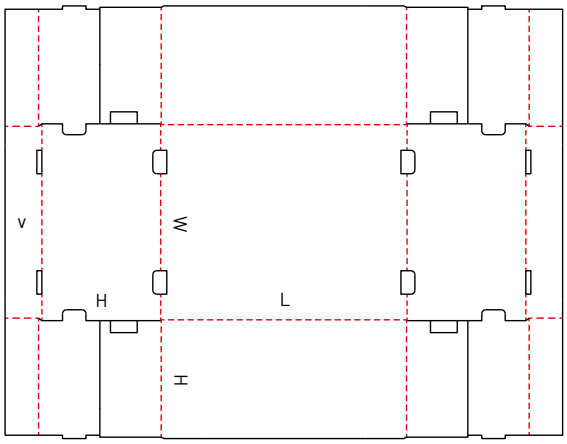

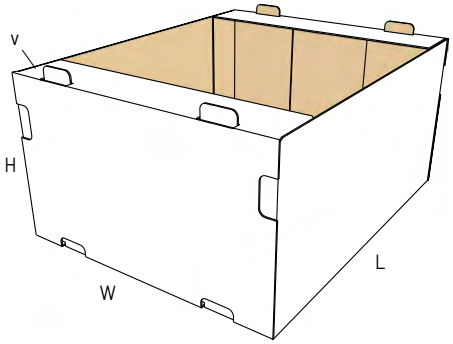

0483 A

NEW

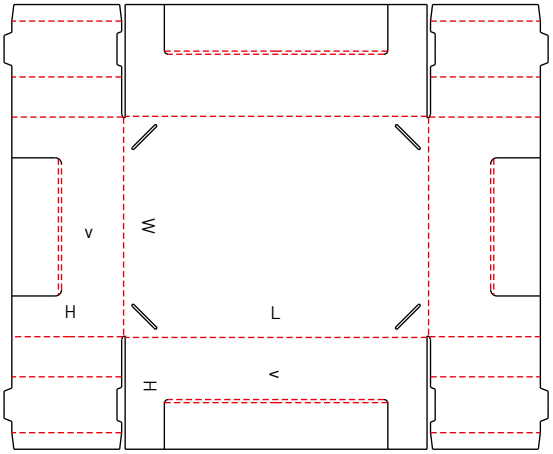

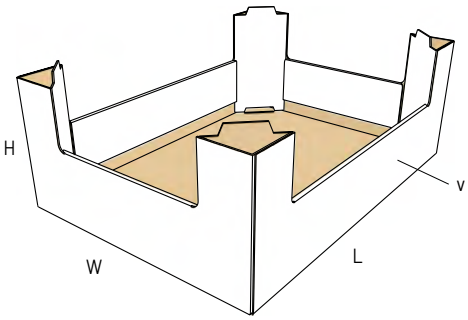

0484 M

NEW

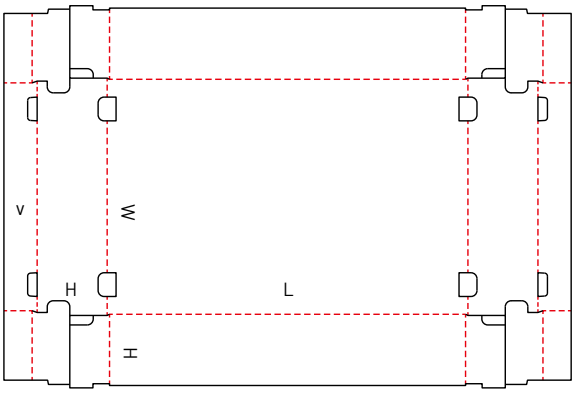

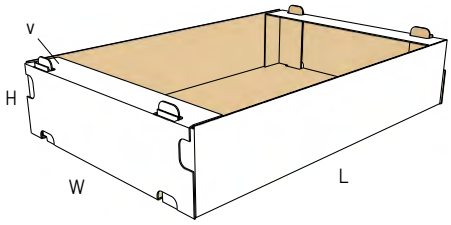

0485 M

NEW

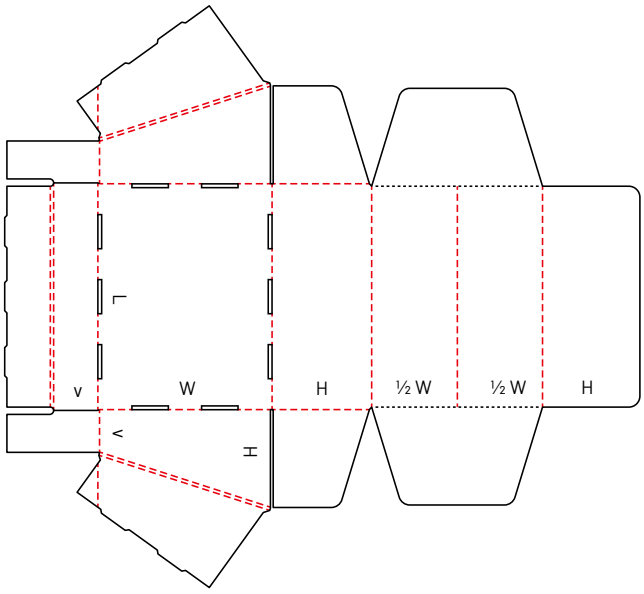

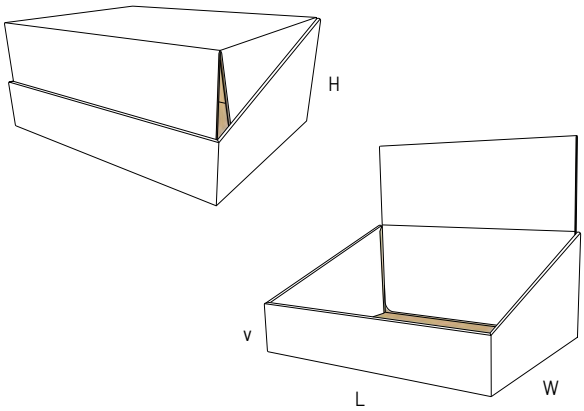

SLIDE BOXES
(Slide Tipi Kutular)

EN - Slide boxes consist of several pieces of liners and sleeves sliding in different directions into each other. This group also includes outside sleeves for other cases.

TR - Slide tip kutular birbirinin içene geçen kutulardır.

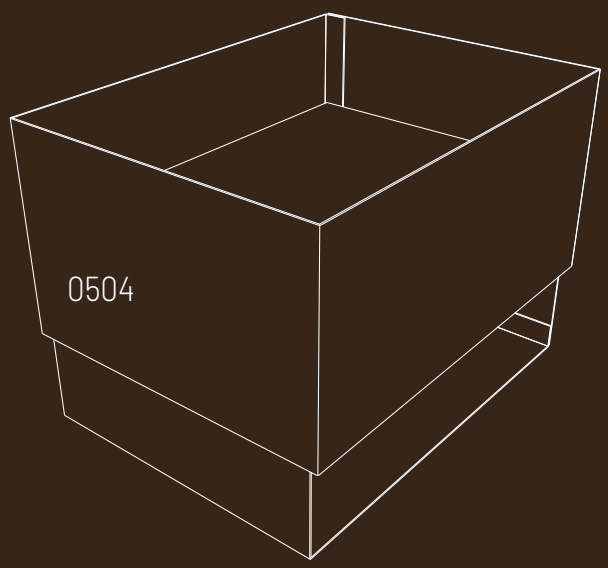

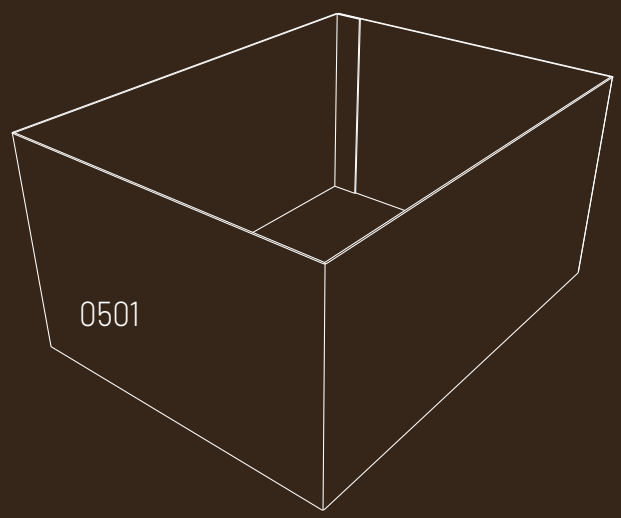

0501 M

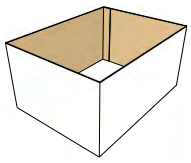

0502 M

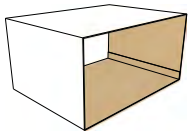

0503 M

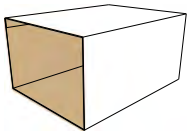

0504 M

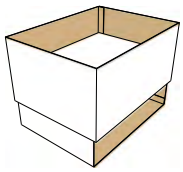

0505 M

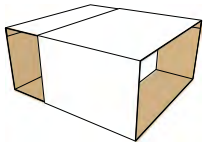

0507 M

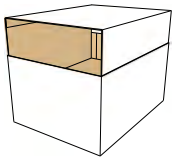

0509 M

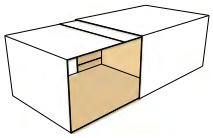

0510 M

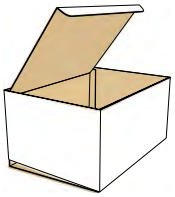

0511 M

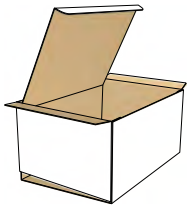

0512 M

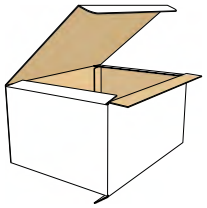

0501 M

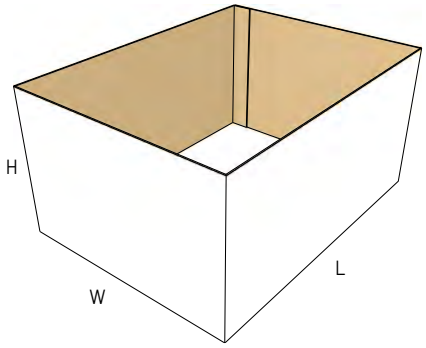

0502 M

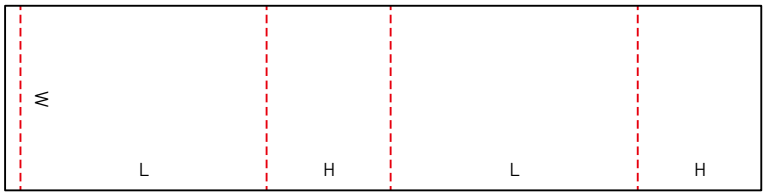

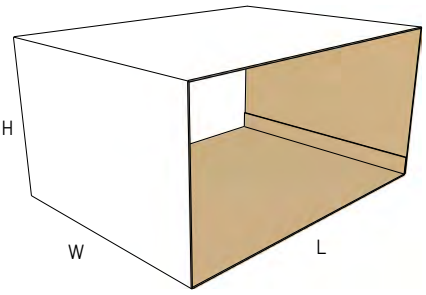

0503 M

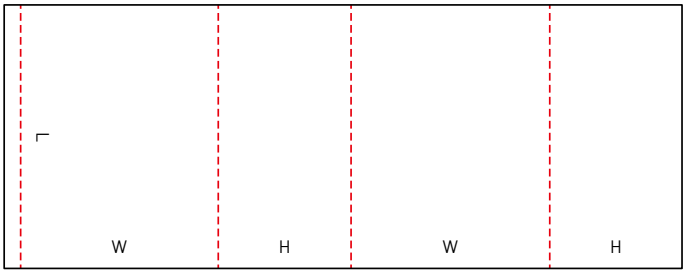

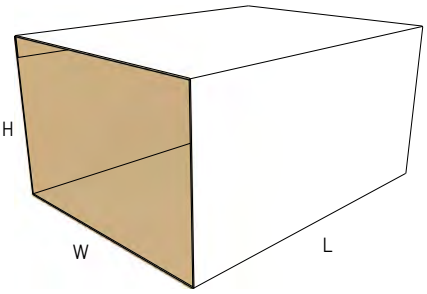

0504 M

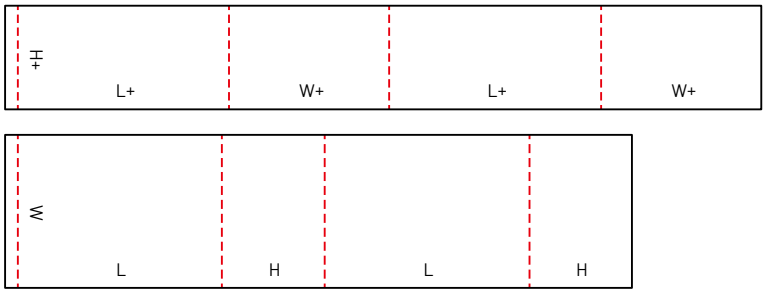

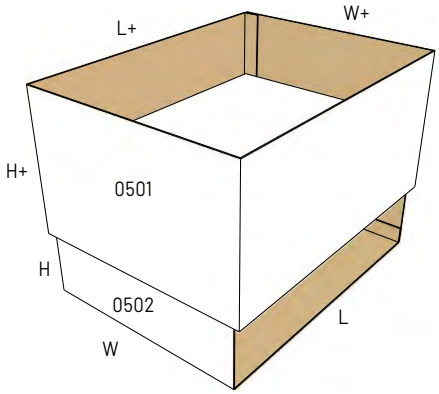

0505 M

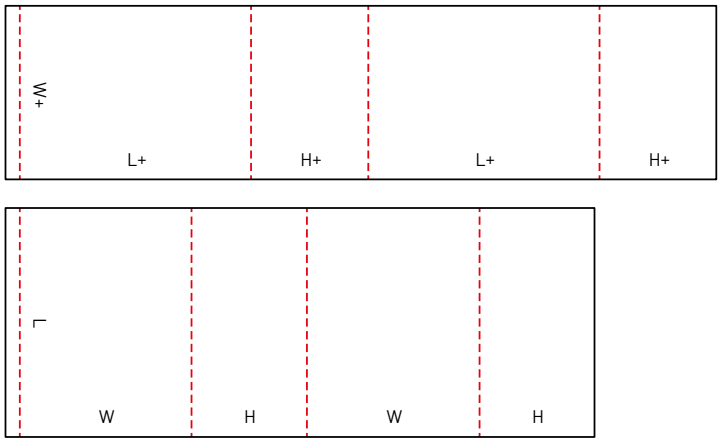

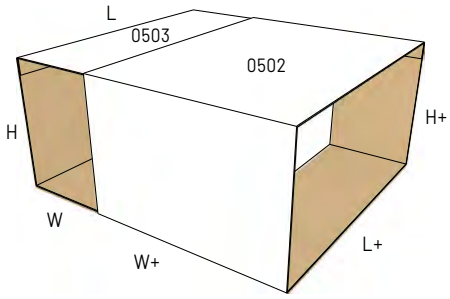

0507 M

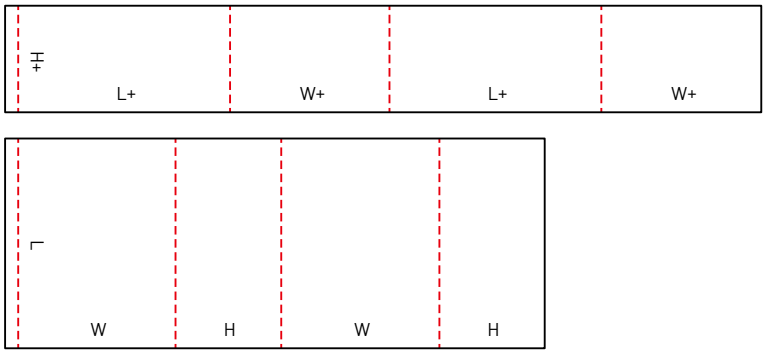

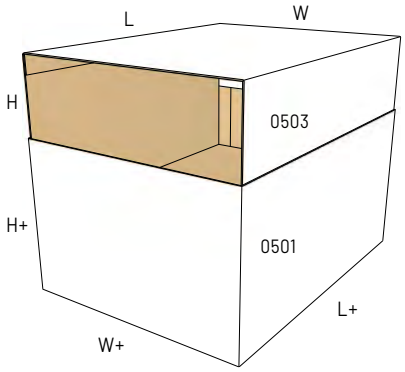

0509 M

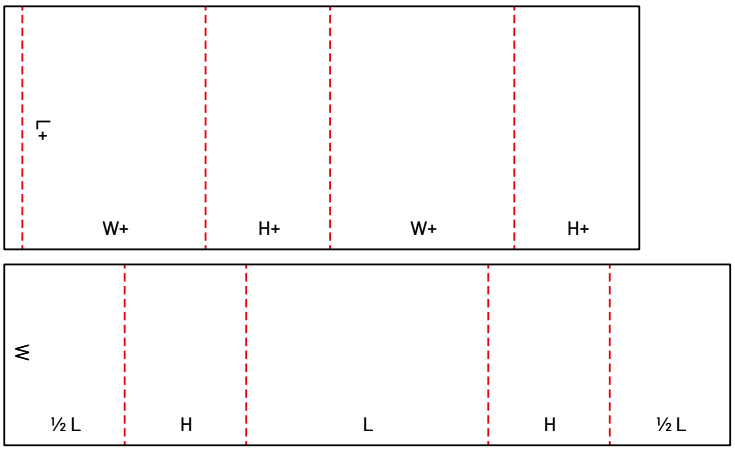

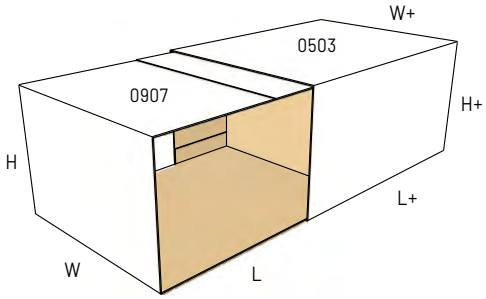

0510 M

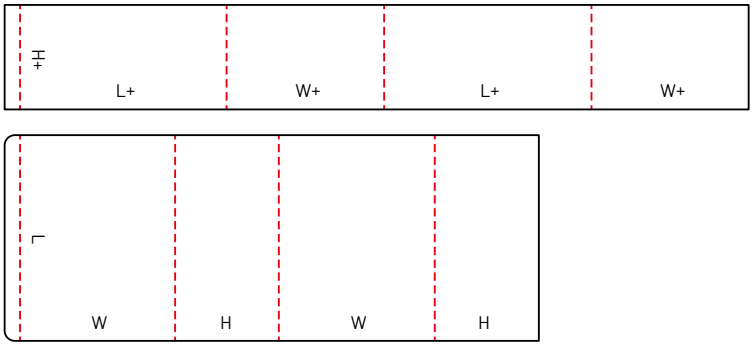

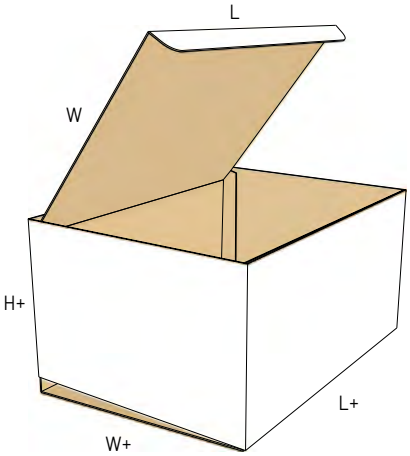

0511 M

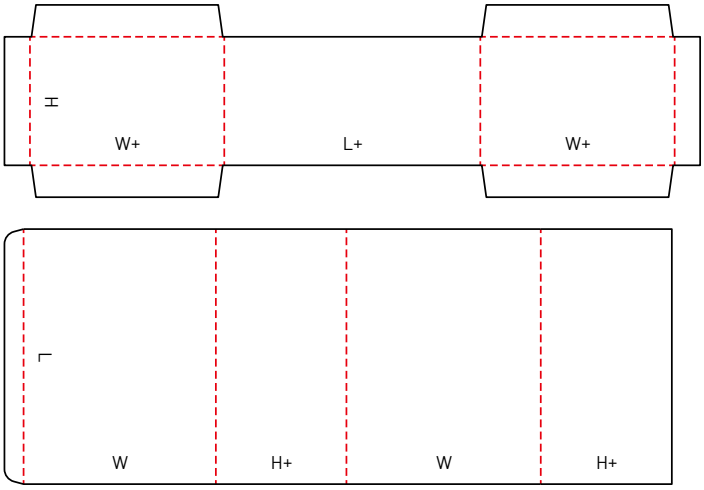

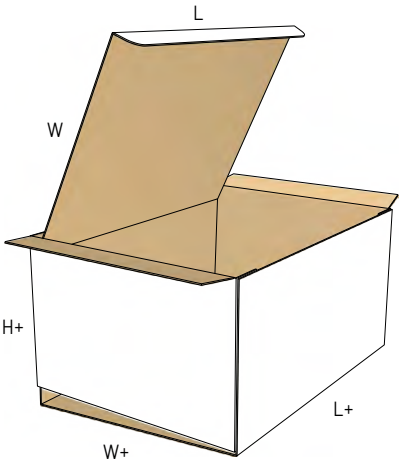

0512 M

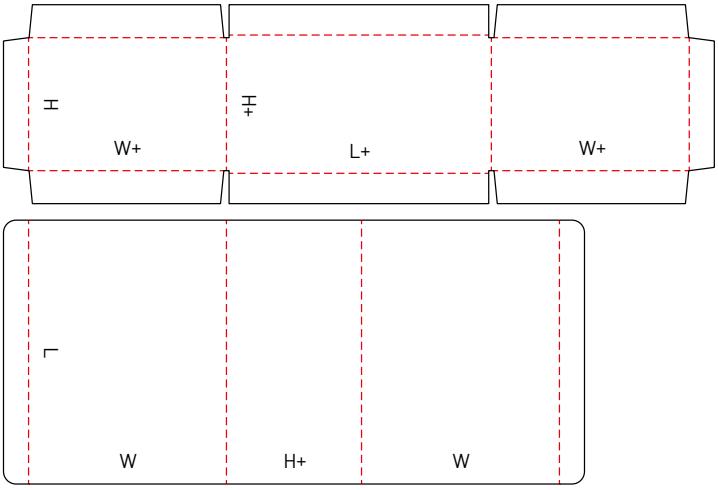

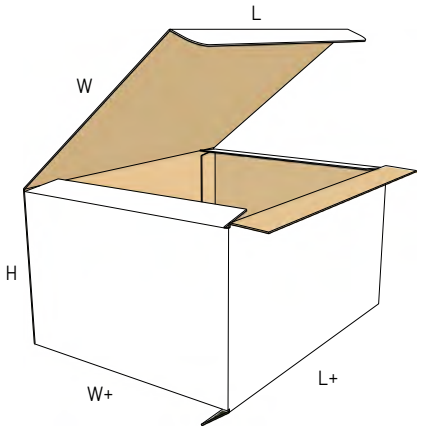

RIGID BOXES

(Sert Dikişli Tip Kutular)

EN - Rigid boxes consist of two separate end pieces and a body that require stitching or a similar operation before they can be used.

TR - Sert dikişli kutular ağır ürünlerin taşınması için kullanılmaktadır. Kutu birleştirilmelerinde dikiş kullanılmaktadır.

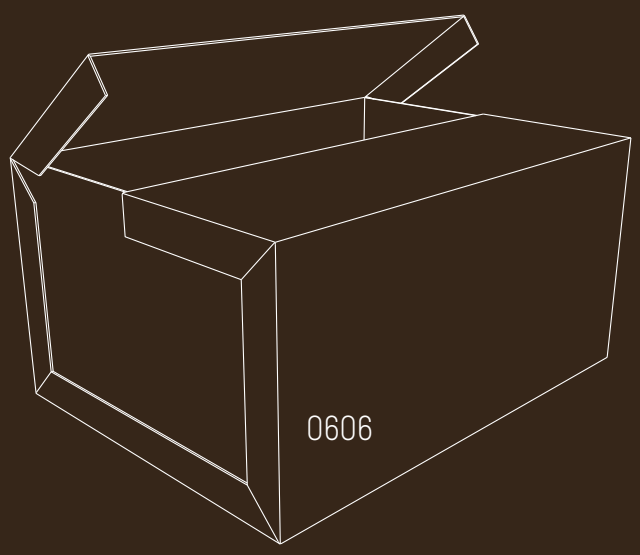

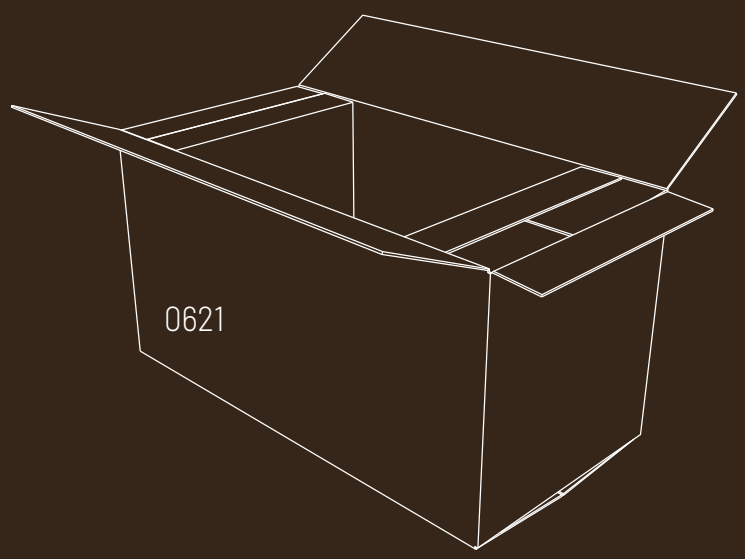

0601 A

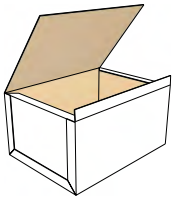

0602 A

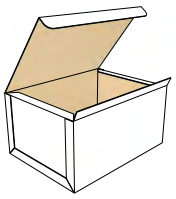

0605 A

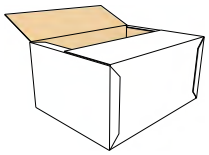

0606 A

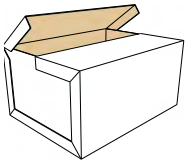

0607 A

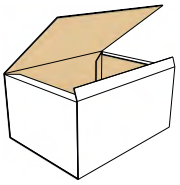

0608 A

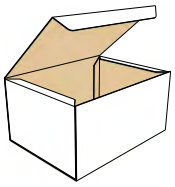

0610 M/A

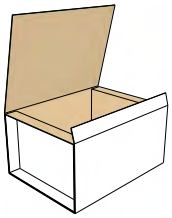

0615 M/A

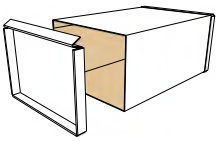

0616 M/A

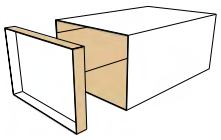

0620 A

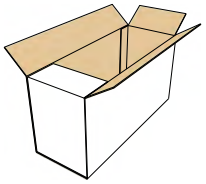

0621 M

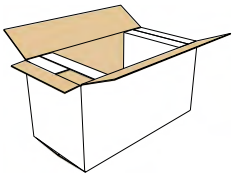

0601 A

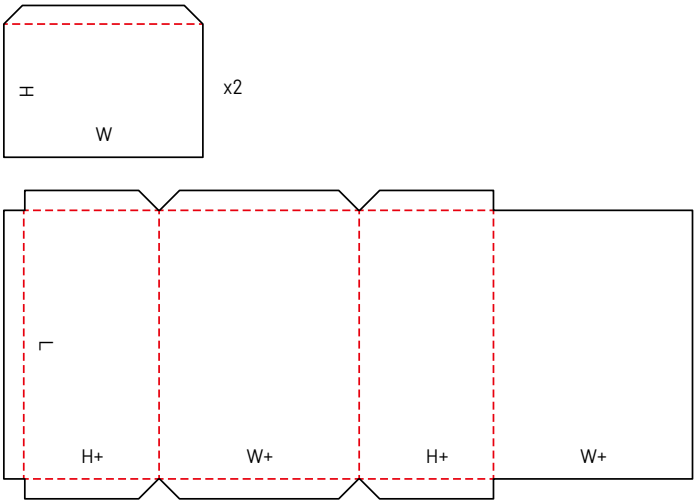

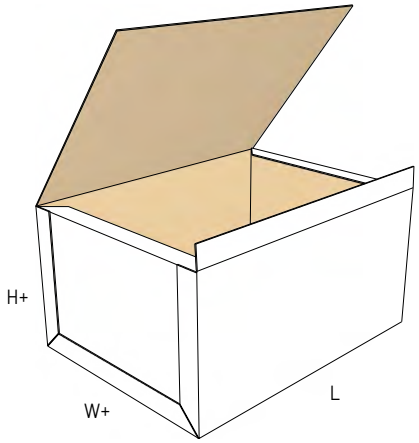

0602 A

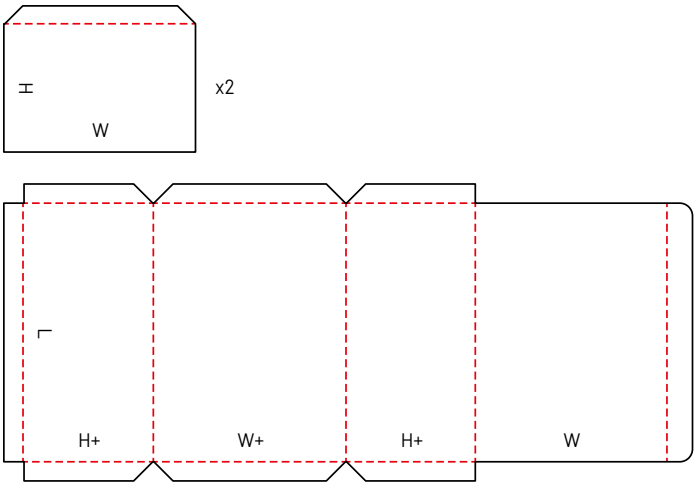

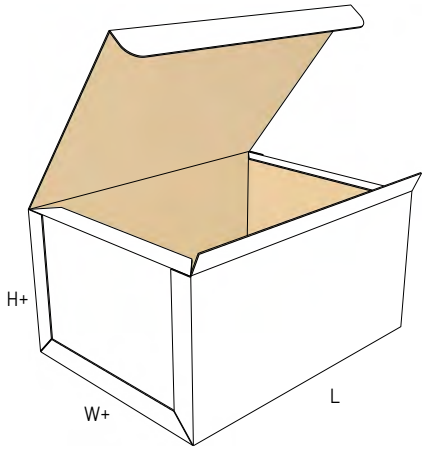

0605 A

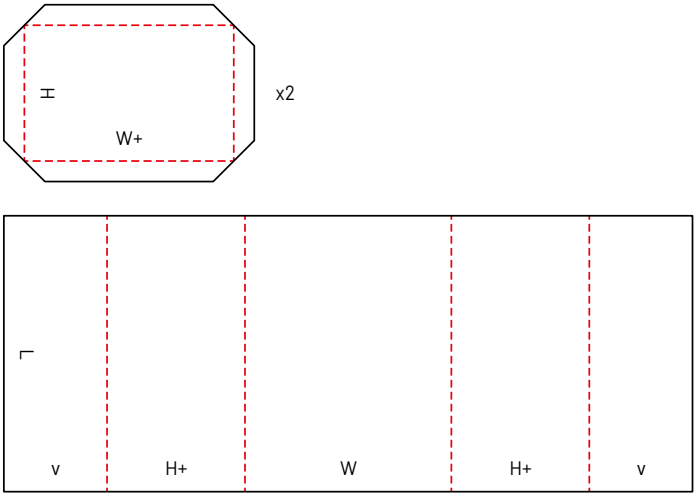

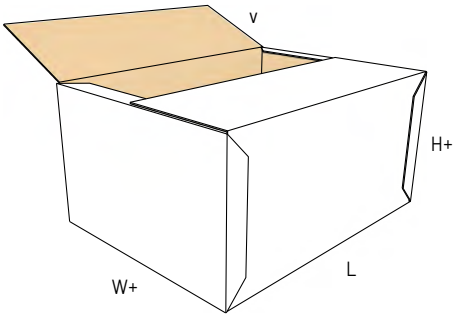

0606 A

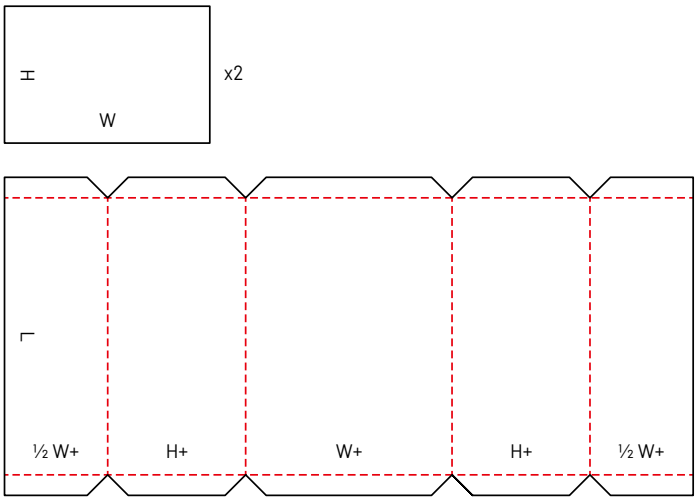

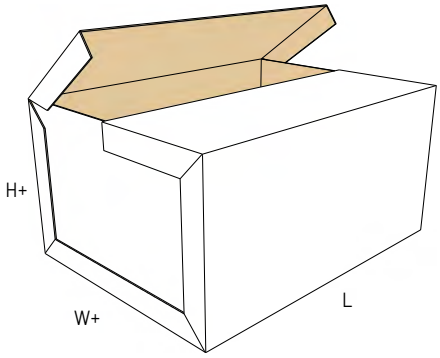

0607 A

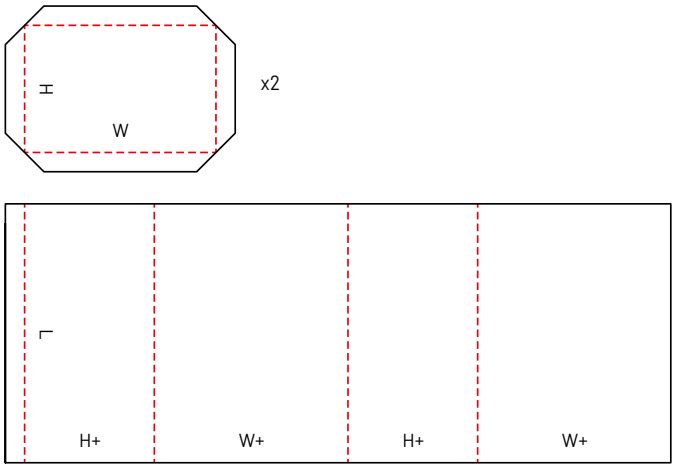

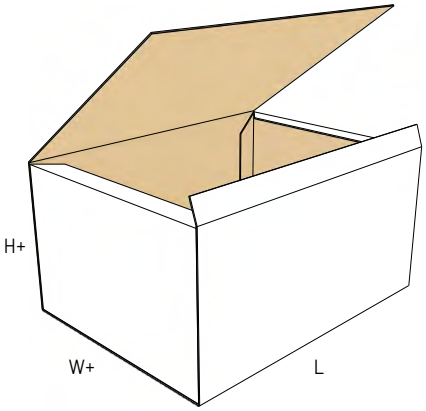

0608 A

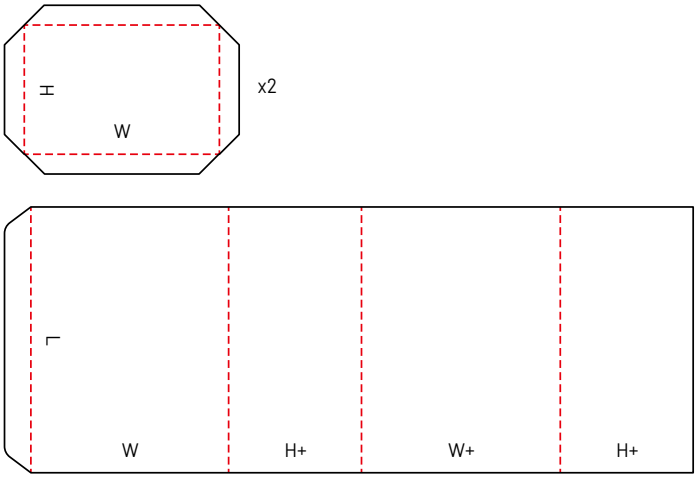

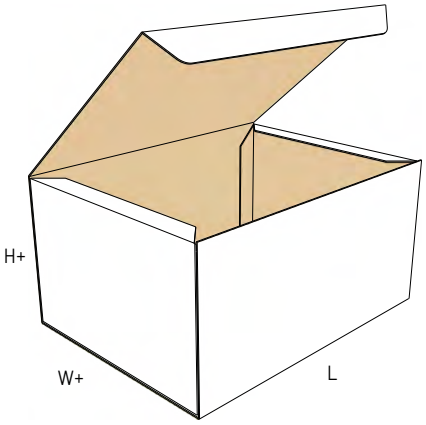

0610 M/A

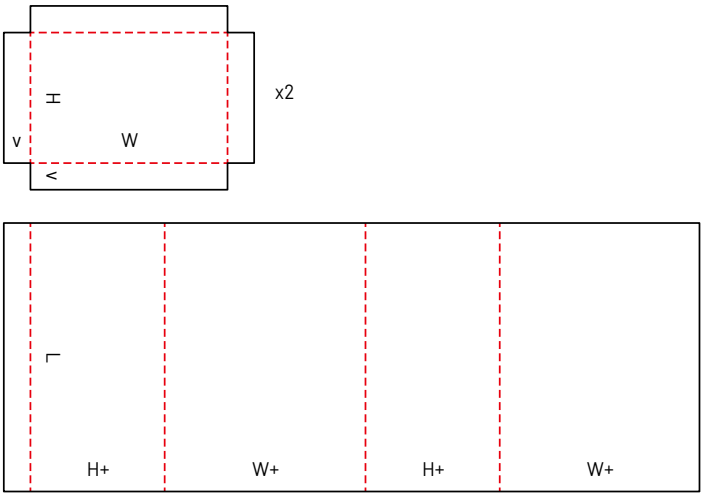

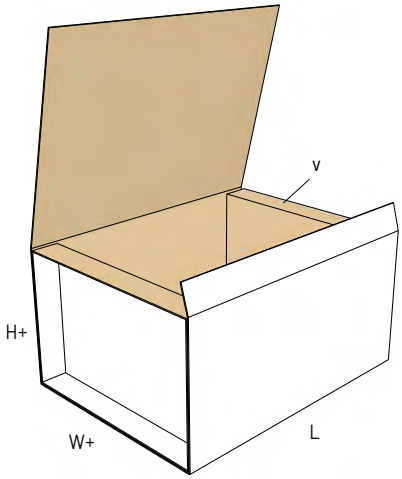

0615 M/A

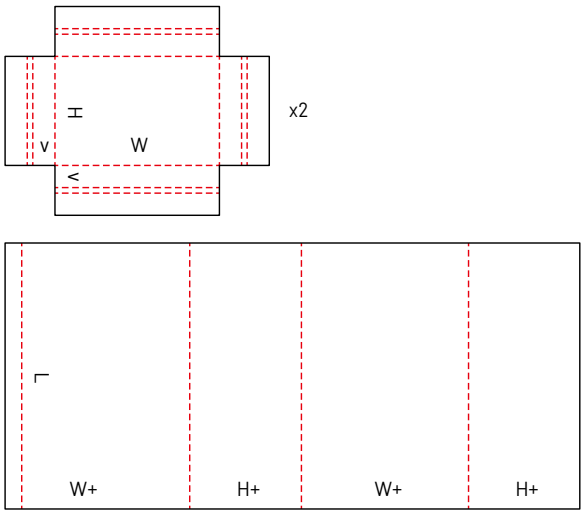

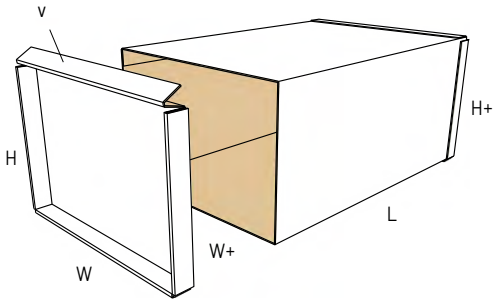

0616 M/A

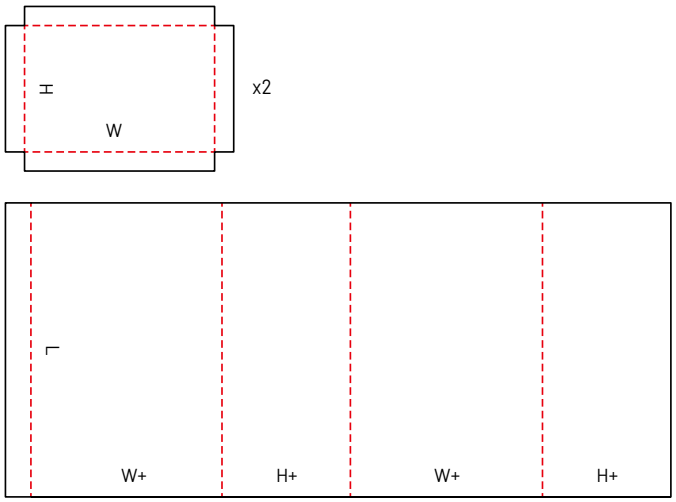

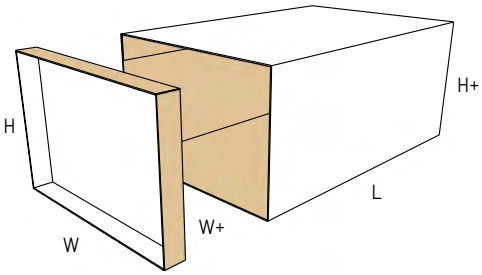

0620 A

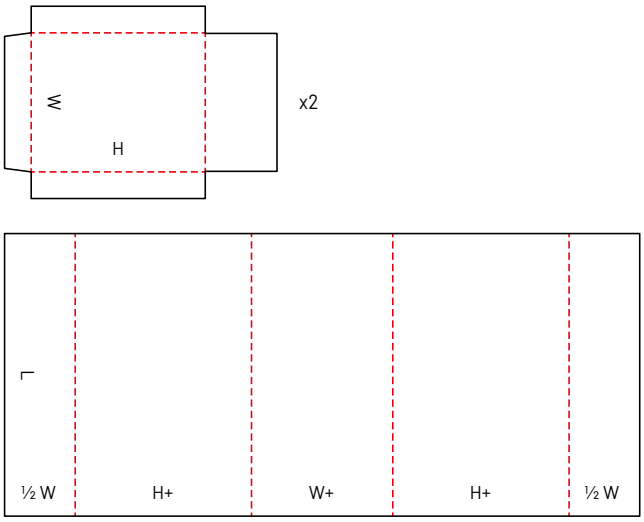

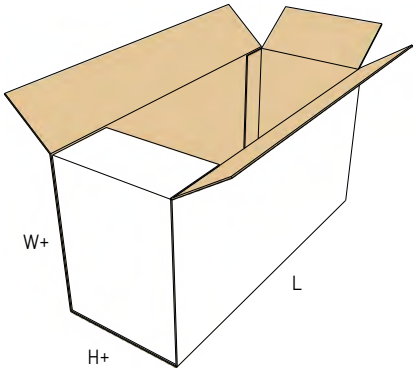

0621 M

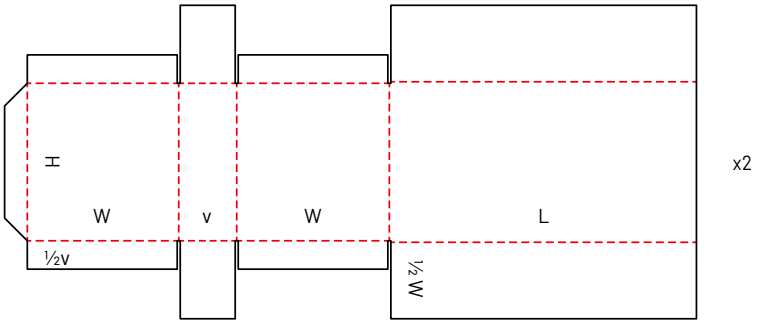

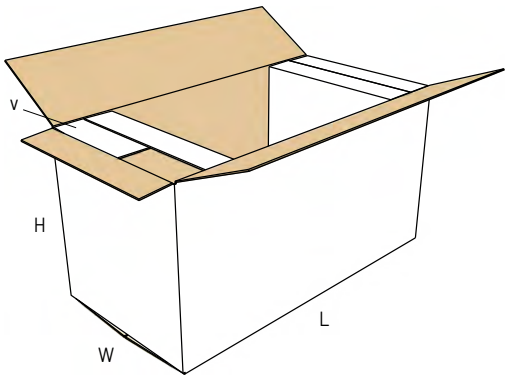

READY-GLUED CASES

(Özel Kesim Kutular)

EN - Ready-glued cases consist of basically one piece, are shipped flat and ready to use by simple assembly.

TR - Müşterilerin taleplerine göre dizayn edilen kolilerdir. Kendinden ya da ayrı kapaklı olabileceği gibi kapaksız da olabilmektedir. Bu tarz kutuların tasarımı müşteri tarafından belirlenmektedir.

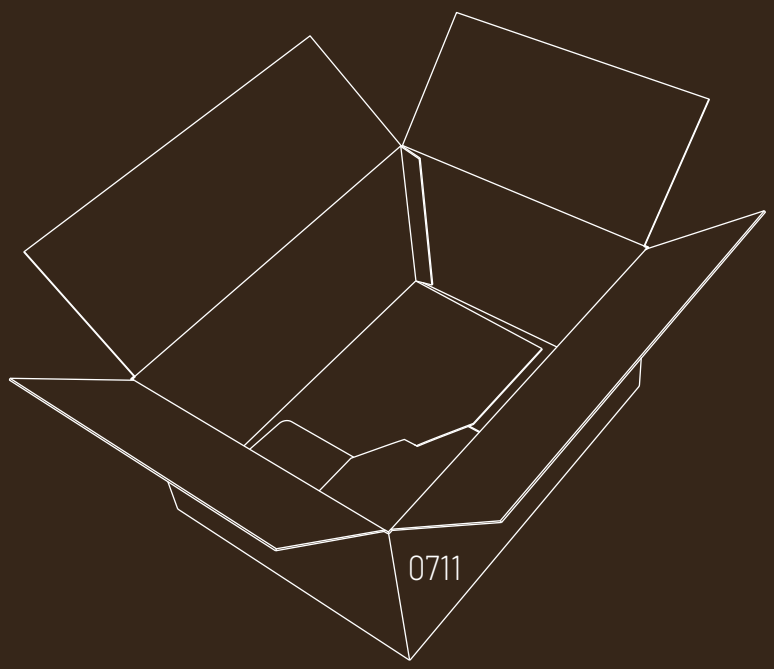

0700 M

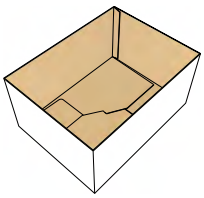

0701 M

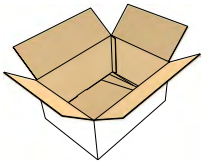

0702 M
NEW

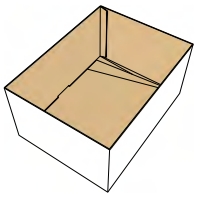

0703 M

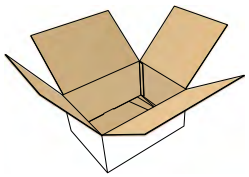

0704 M
NEW

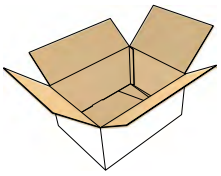

0705 M
NEW

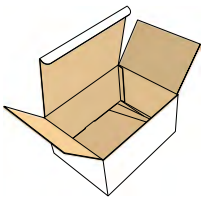

0706 M
NEW

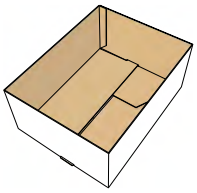

0707 M
NEW

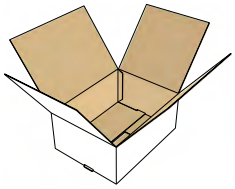

0708 M
NEW

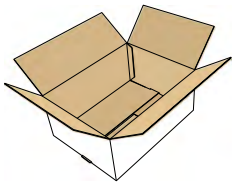

0709 M
NEW

0710 M
NEW

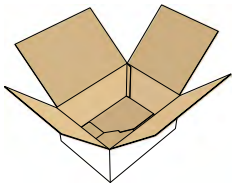

0711 M

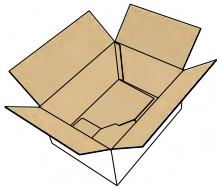

0712 M

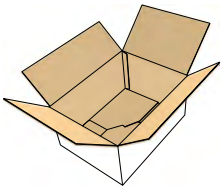

0713 M

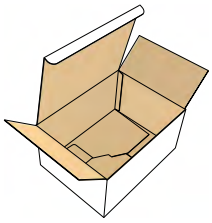

0714 M

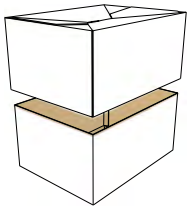

0715 M

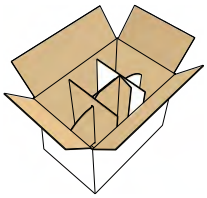

0716 M

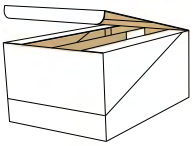

0717 M

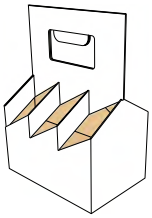

0718 M

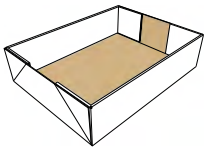

0719 M
NEW

0720 M
NEW

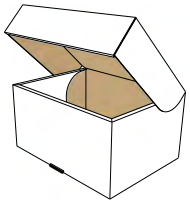

0721 M
NEW

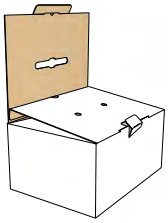

0722 M
NEW

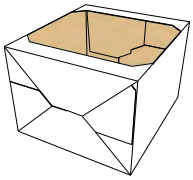

0723 M
NEW

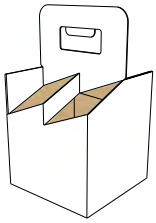

0724 M
NEW

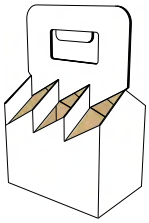

0725 M
NEW

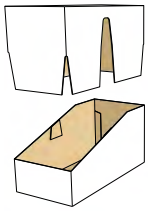

0726 M
NEW

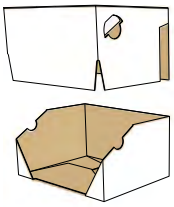

0727 A
NEW

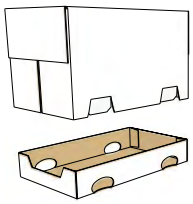

0728 M
NEW

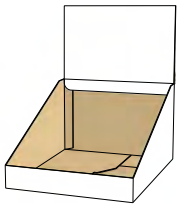

0730 M
NEW

0740 M
NEW

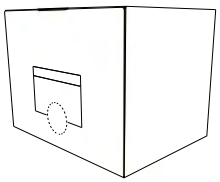

0747 M

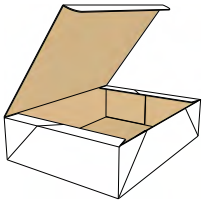

0748 M

0751 M

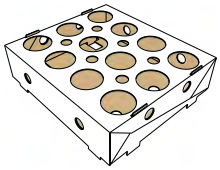

0752 M

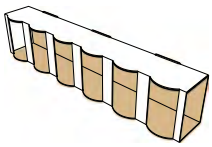

759 M

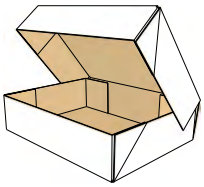

0761 M

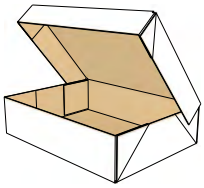

0770 M

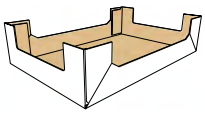

0771 M

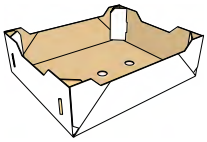

0772 M

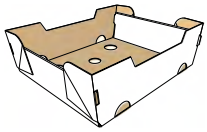

0773 M

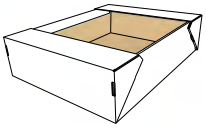

0774 M

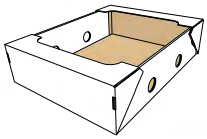

0700 M

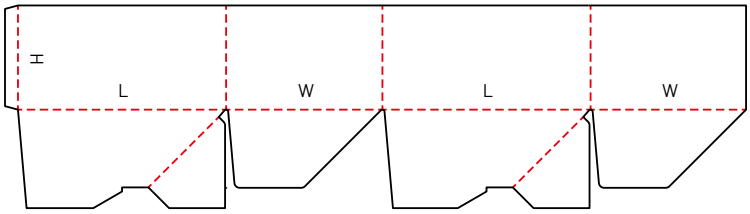

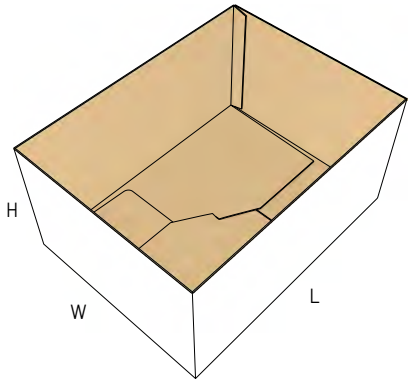

0701 M

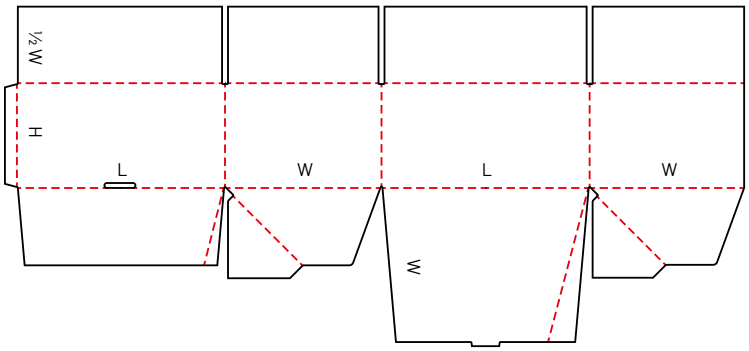

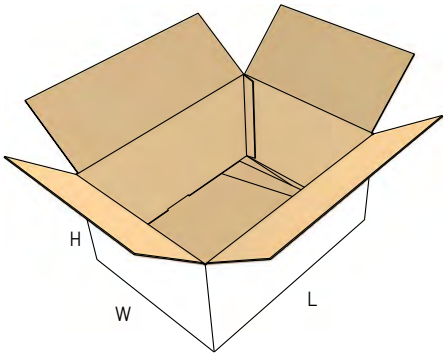

0702 M

NEW

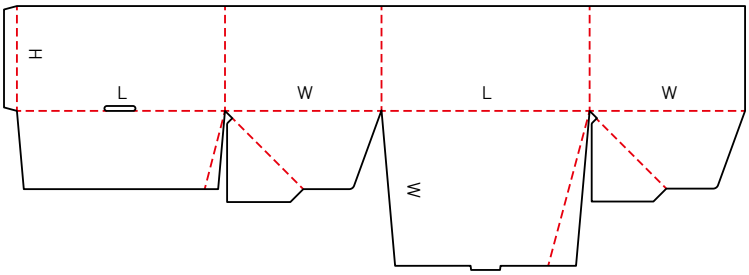

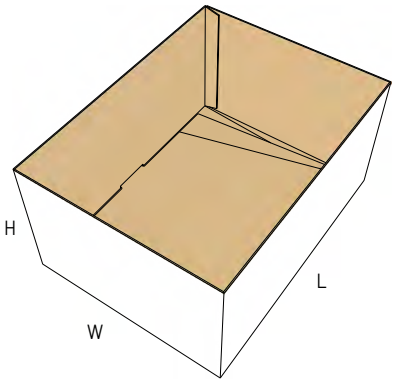

0703 M

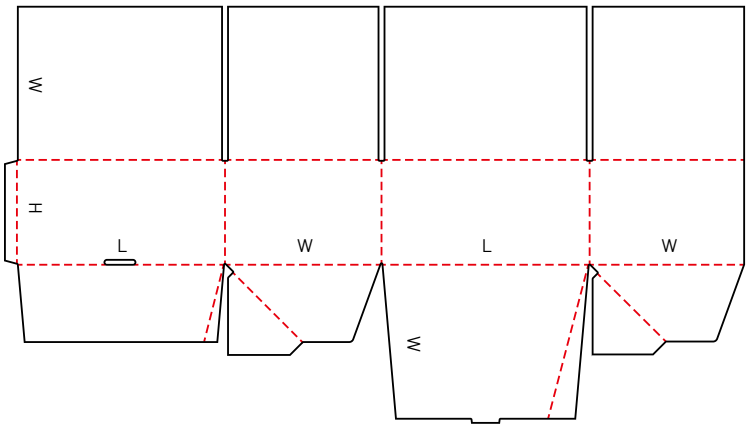

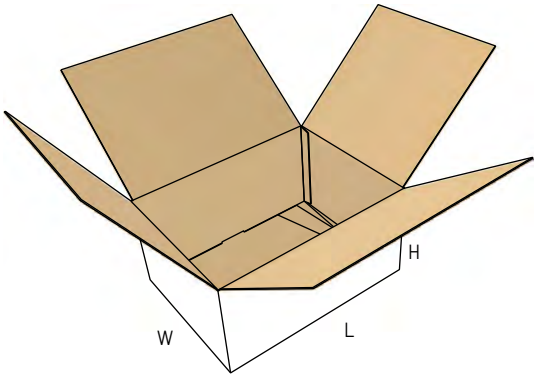

0704 M

NEW

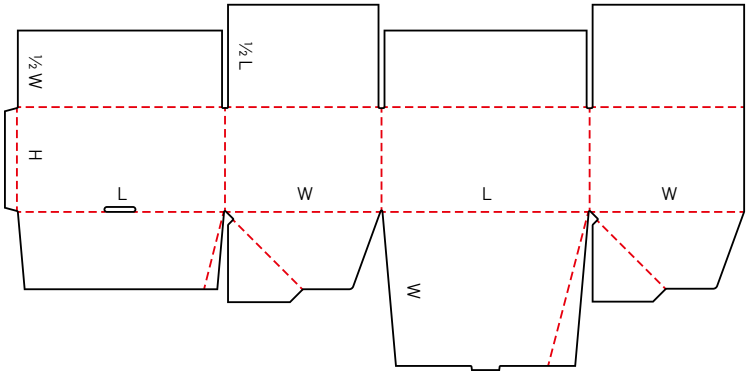

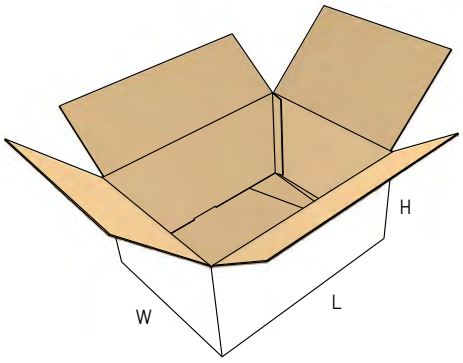

0705 M

NEW

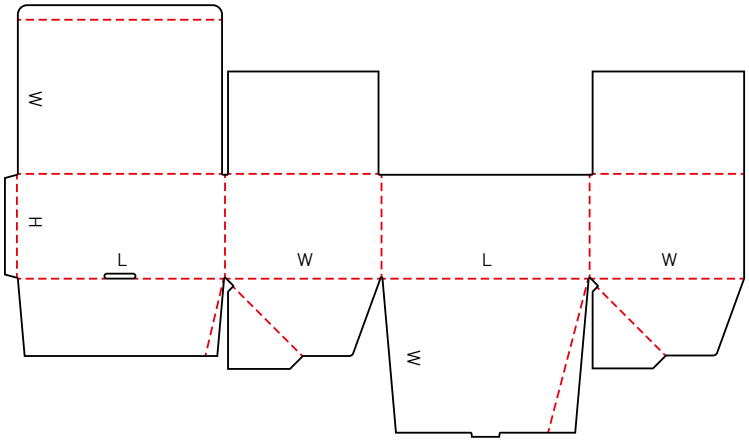

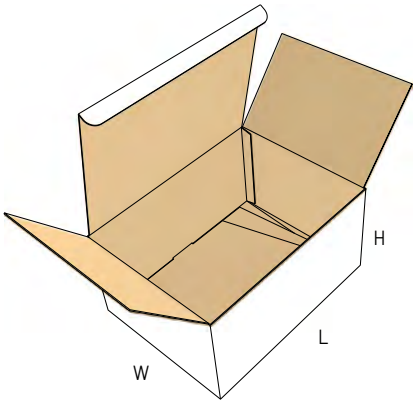

0706 M

NEW

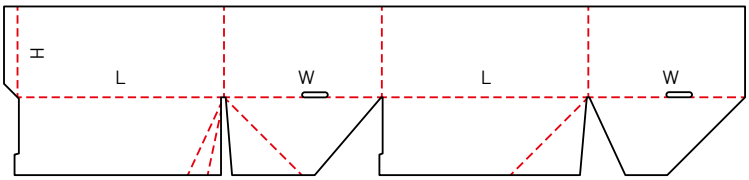

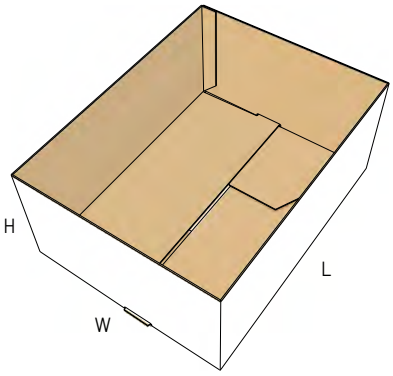

0707 M

NEW

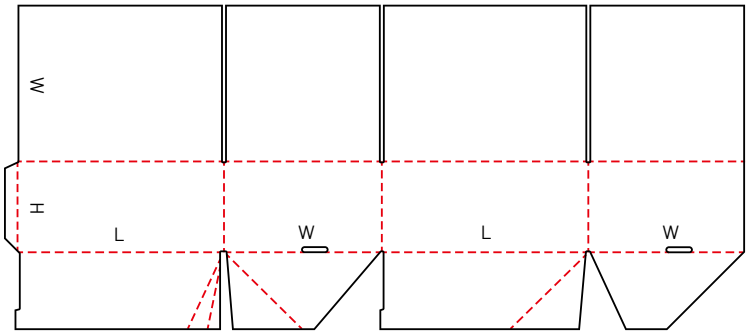

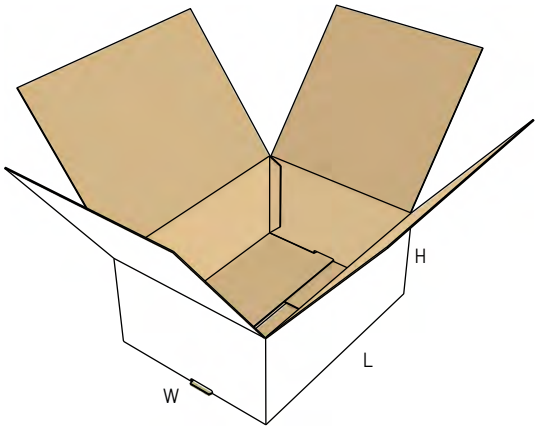

0708 M

NEW

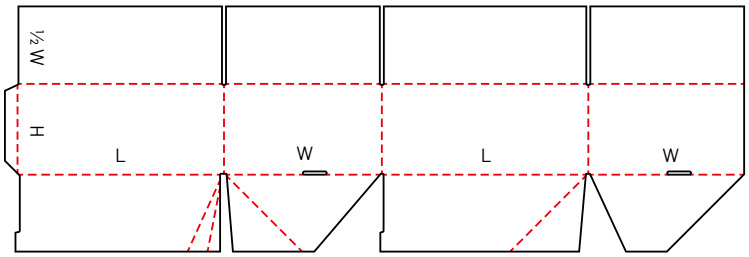

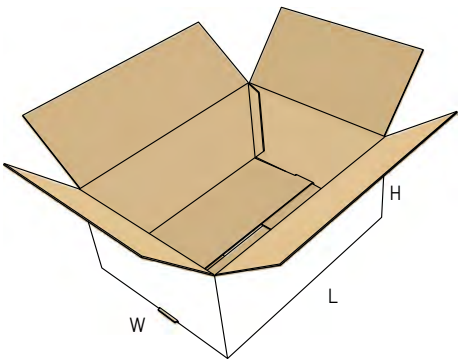

0709 M

NEW

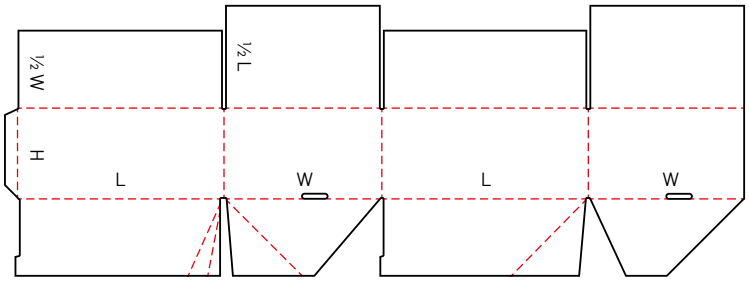

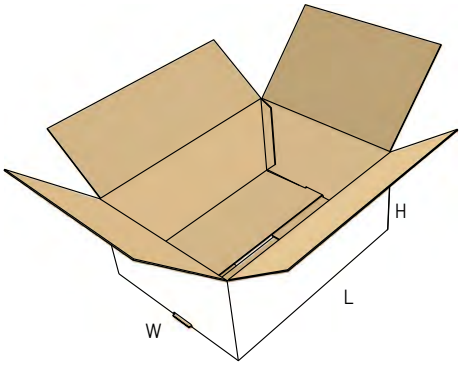

0710 M

NEW

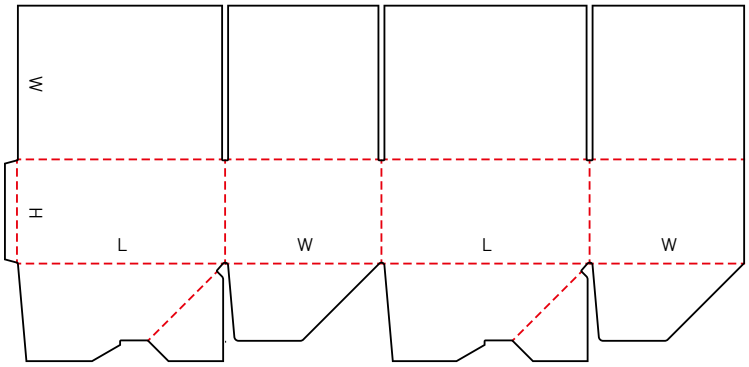

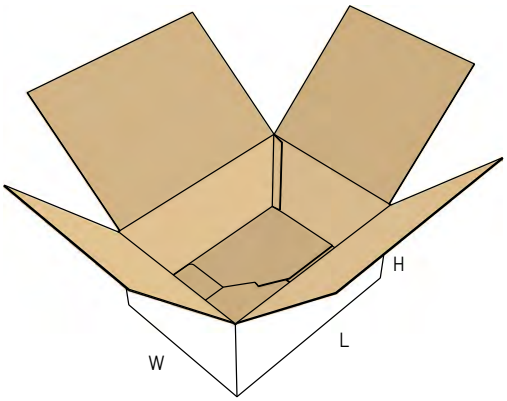

0711 M

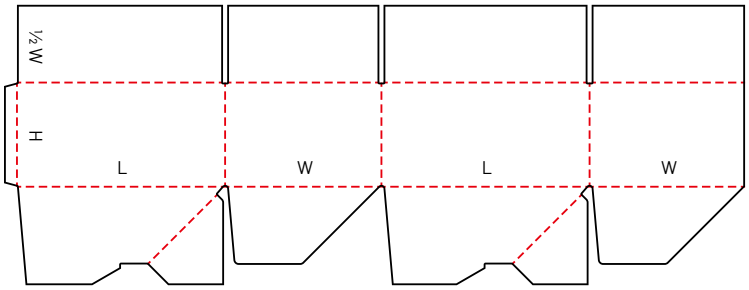

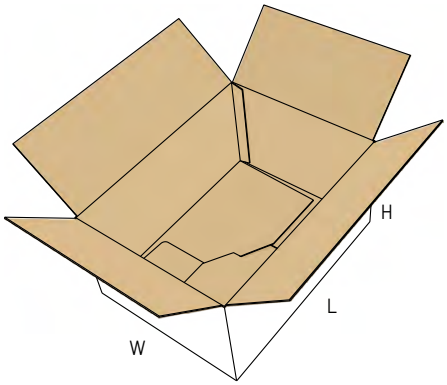

0712 M

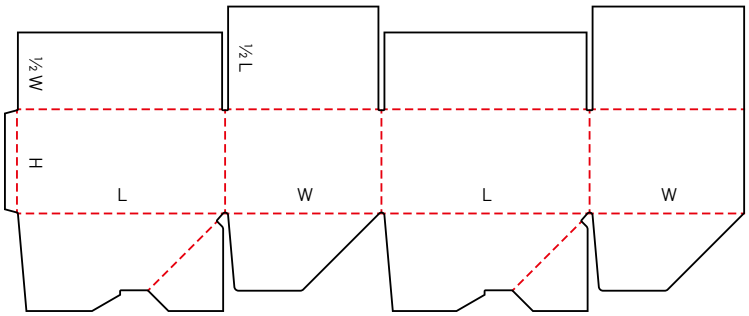

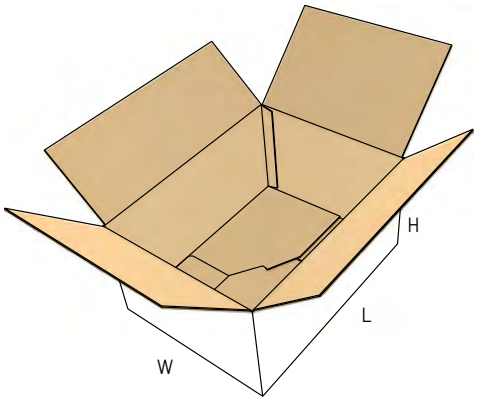

0713 M

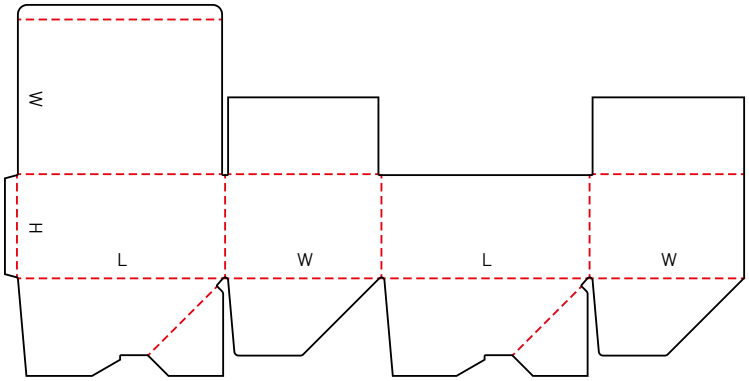

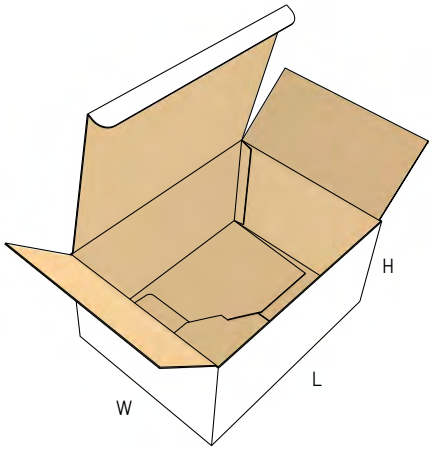

0714 M

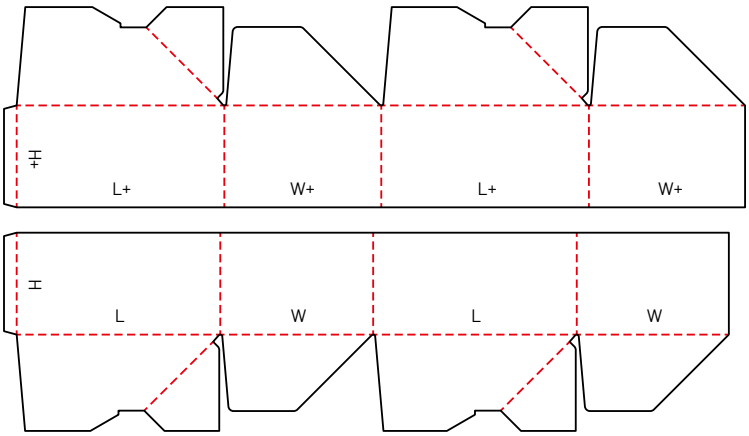

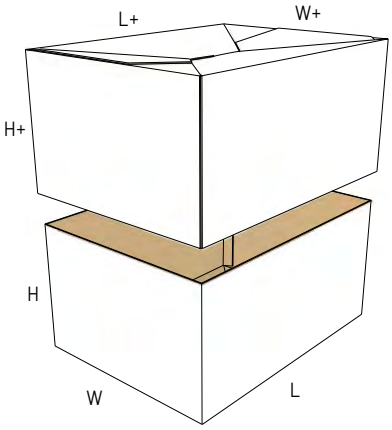

0715 M

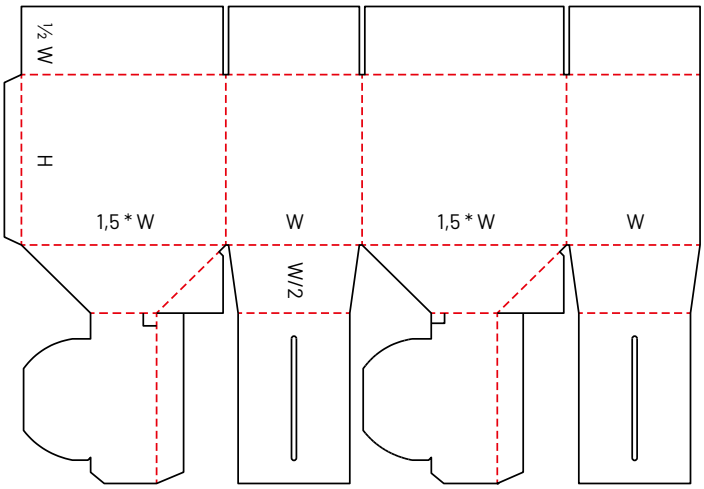

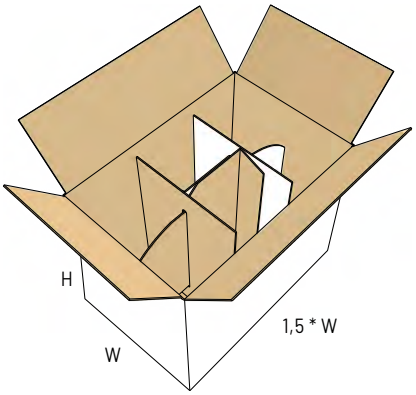

0716 M

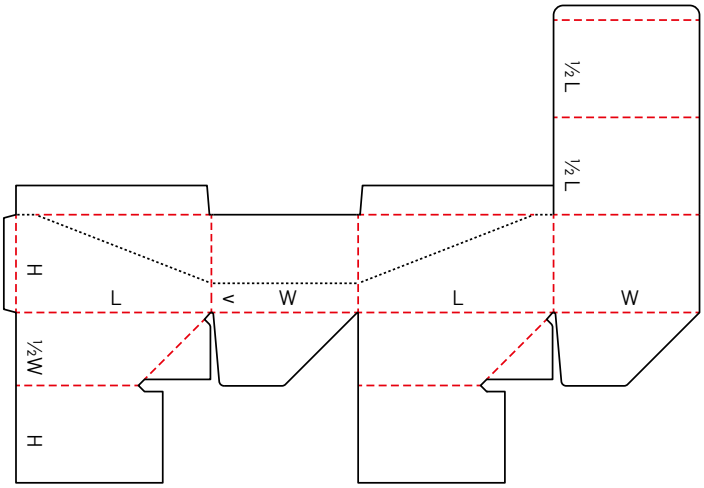

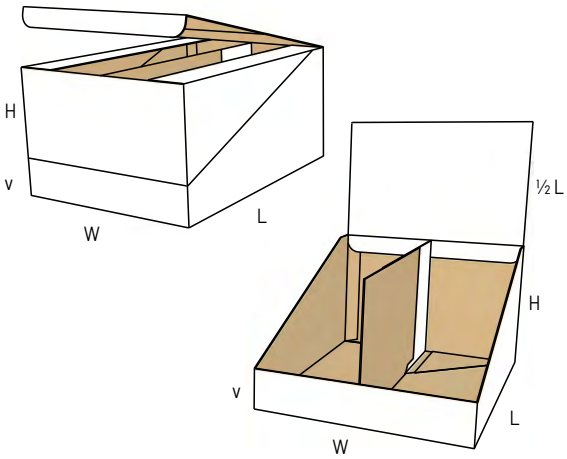

0717 M

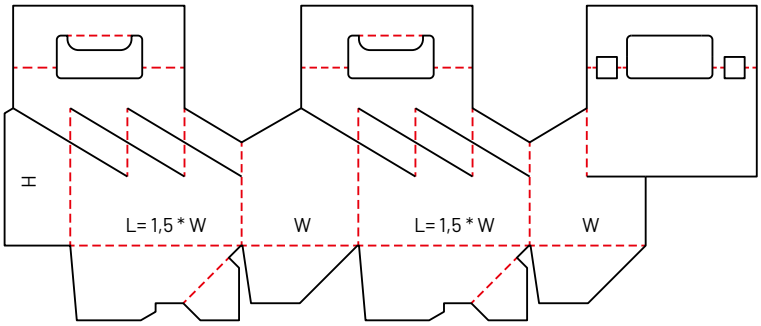

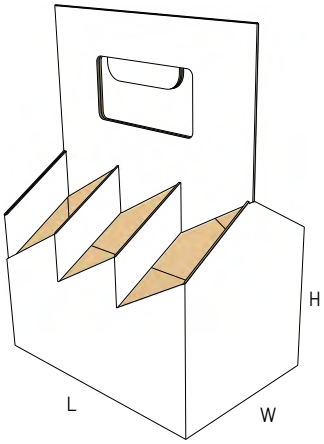

0718 M

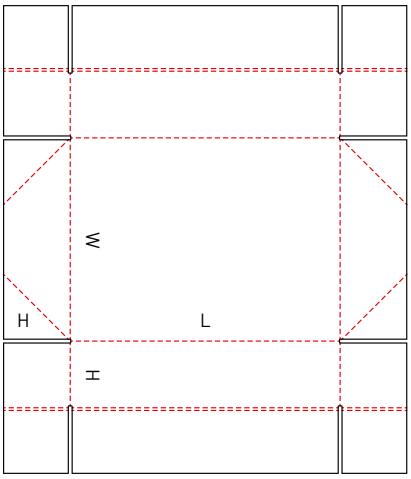

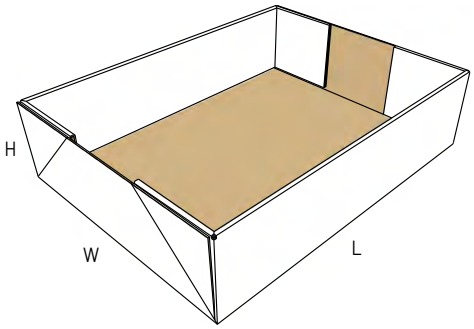

0719 M

NEW

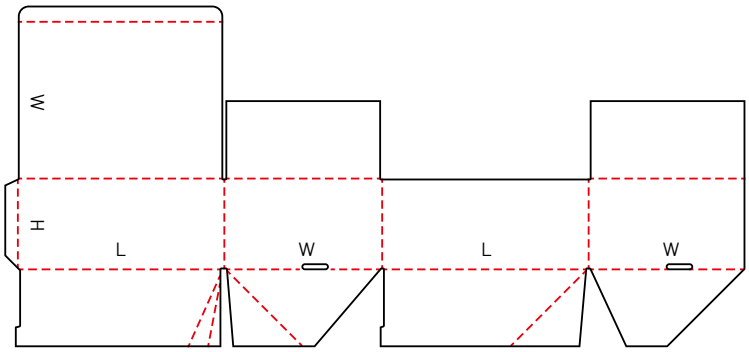

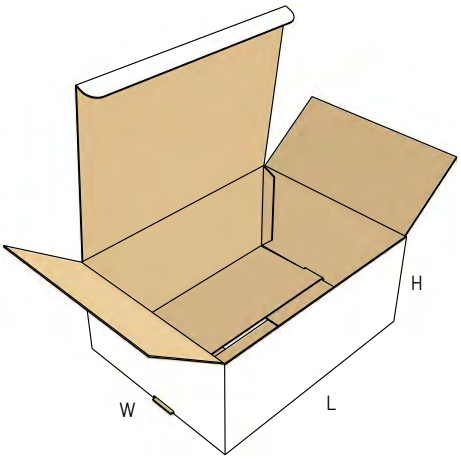

0720 M

NEW

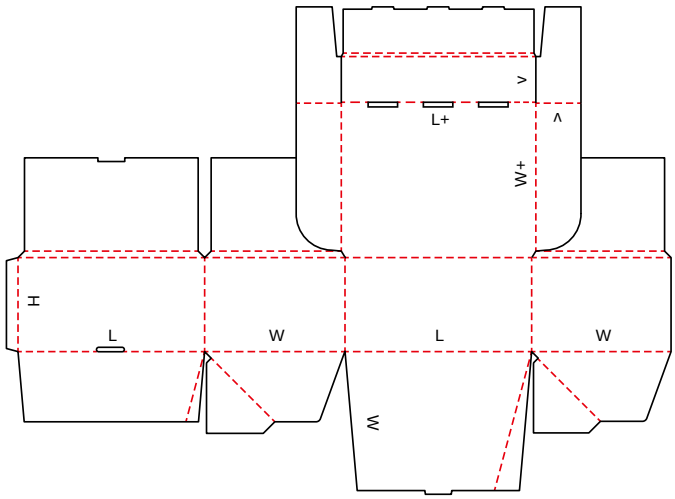

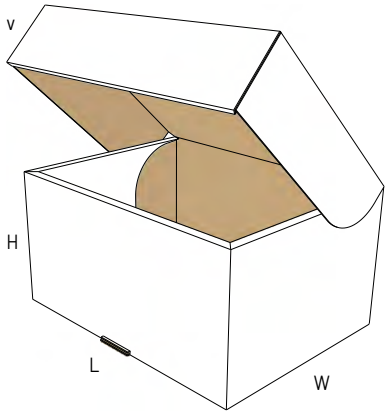

0721 M

NEW

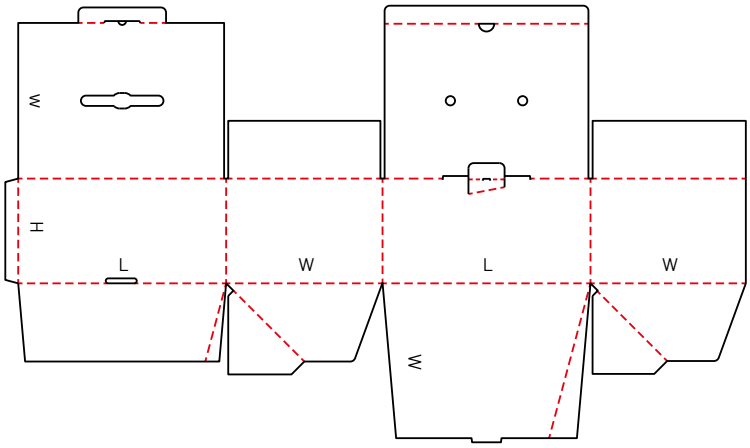

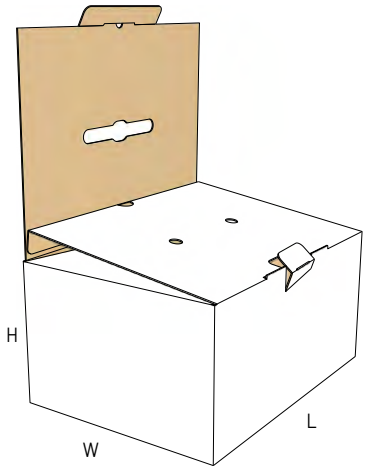

0722 M

NEW

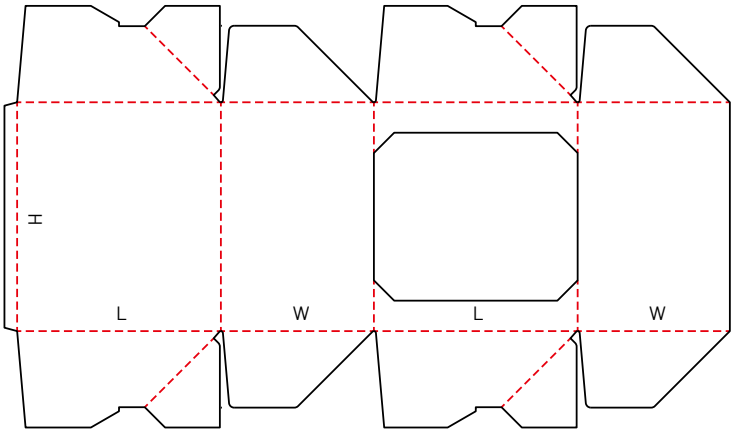

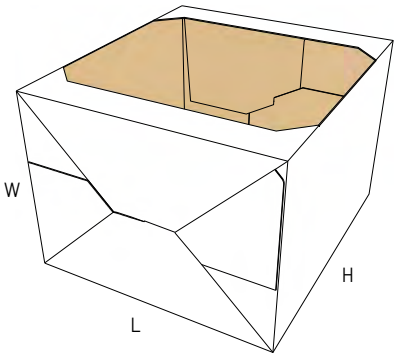

0723 M

NEW

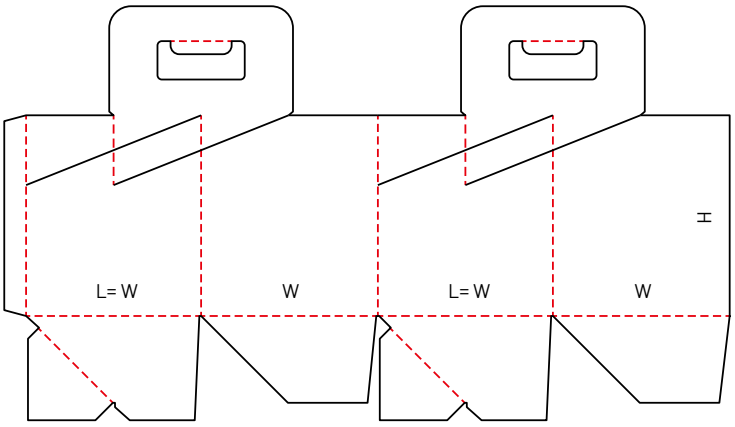

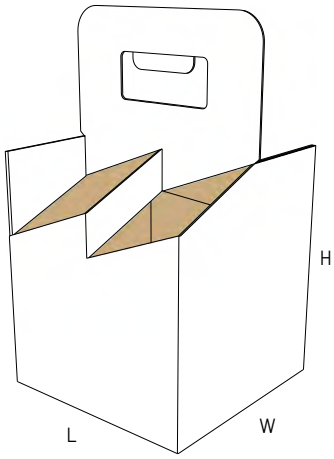

0724 M

NEW

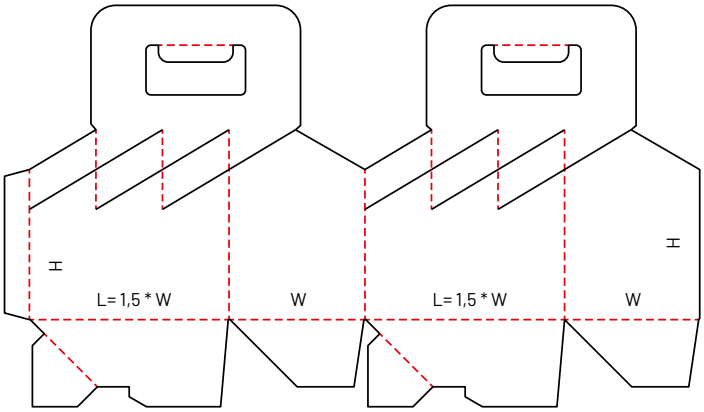

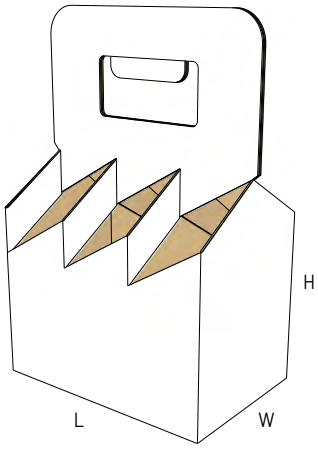

0725 M

NEW

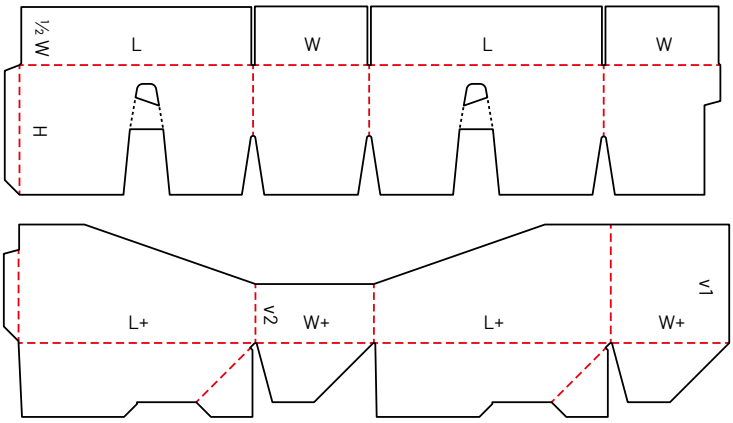

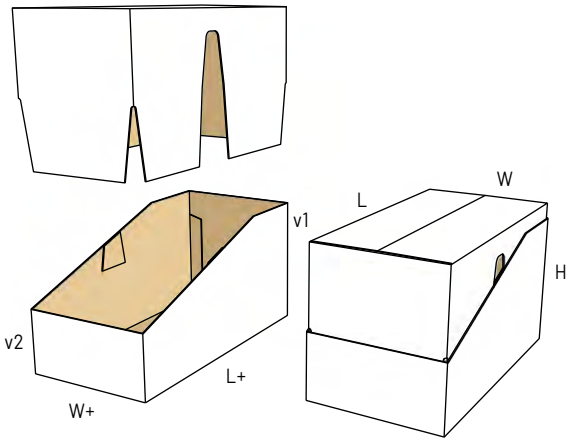

0726 M

NEW

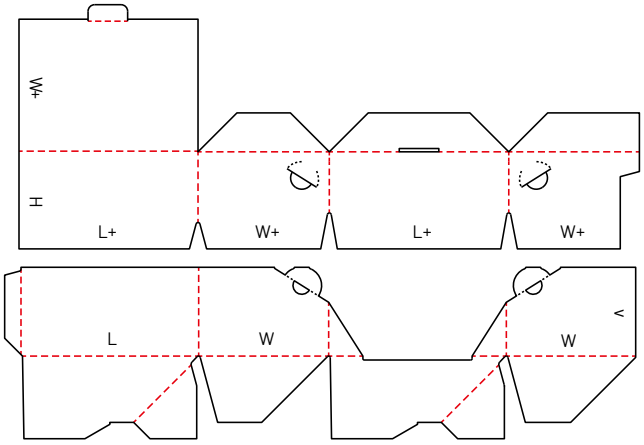

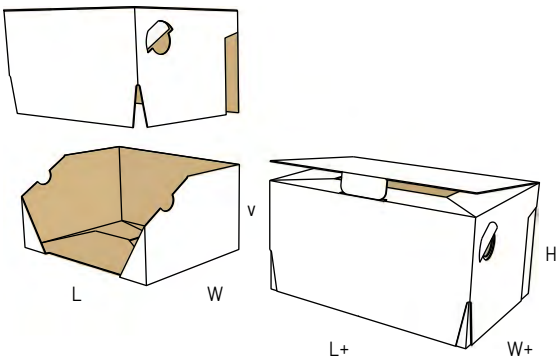

0727 A

NEW

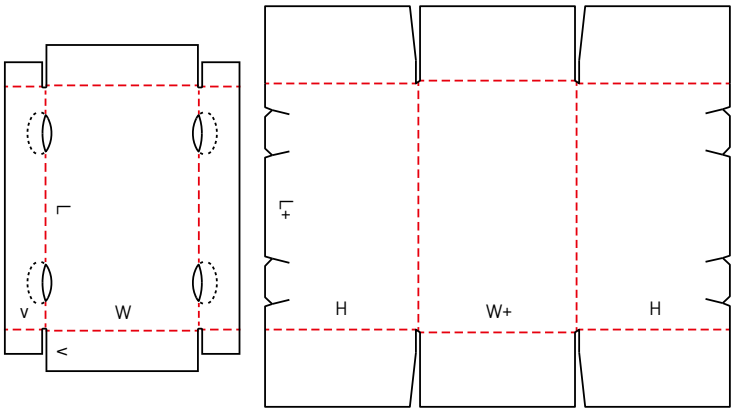

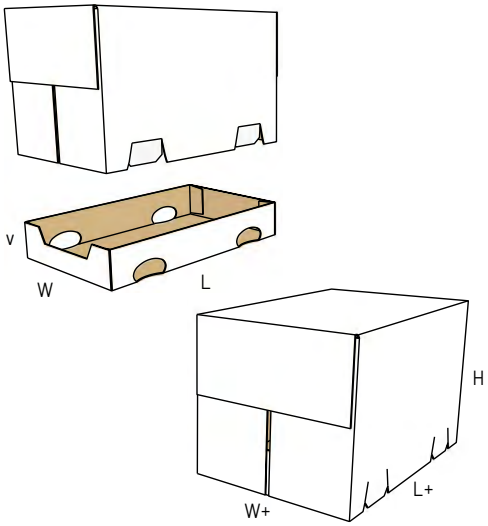

0728 M

NEW

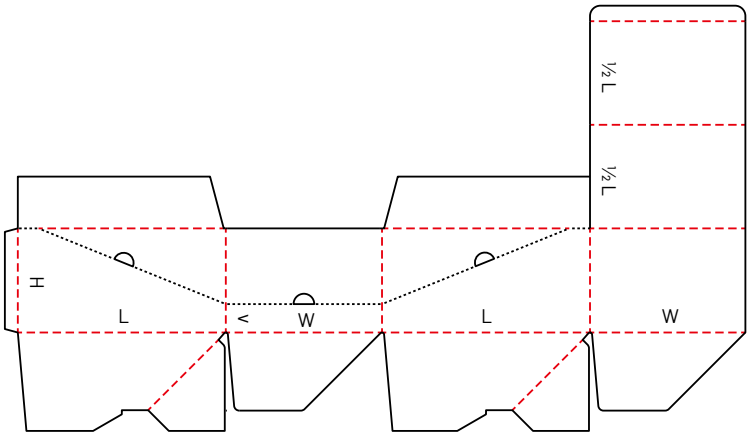

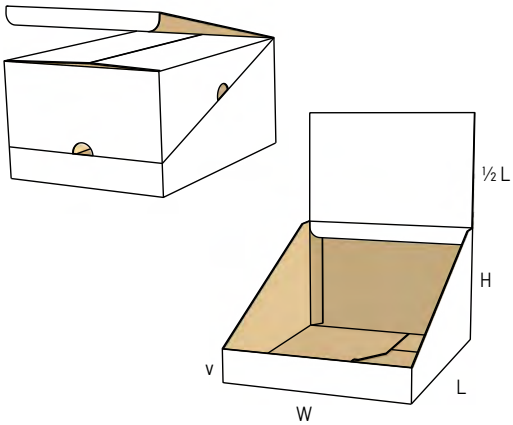

0730 M

NEW

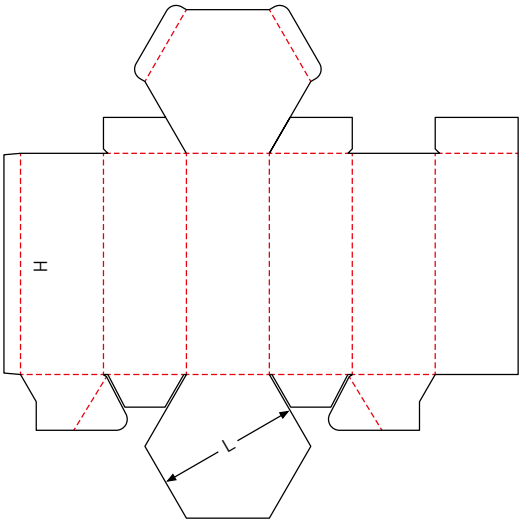

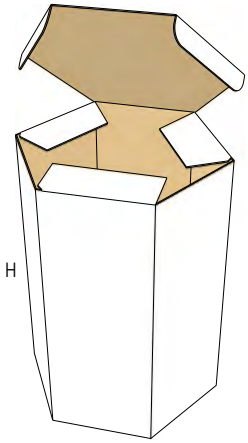

0740 M

NEW

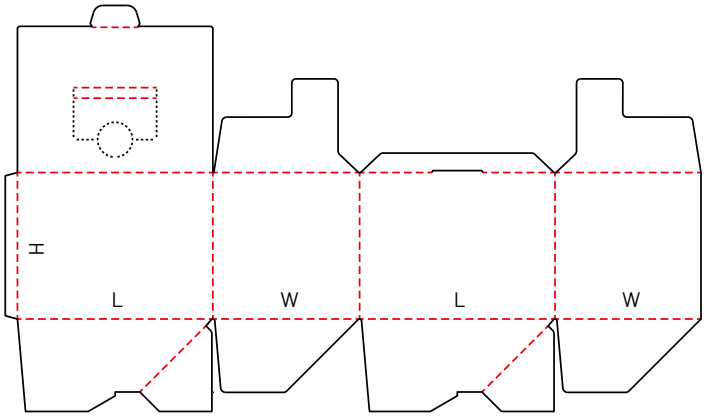

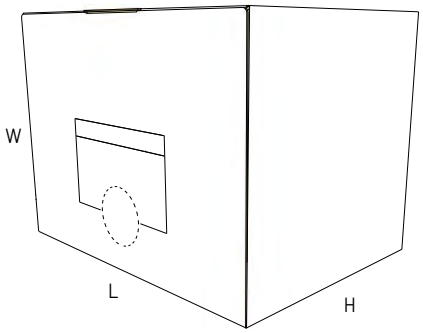

0747 M

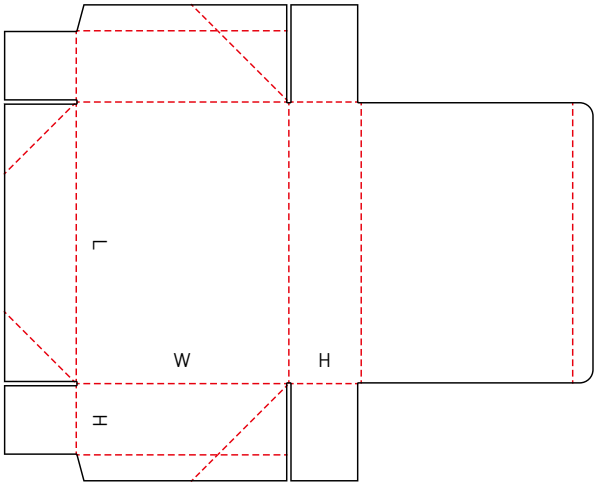

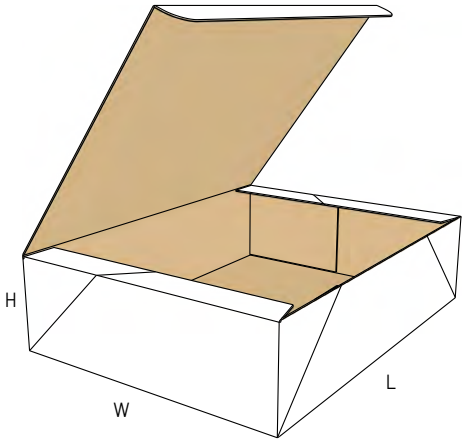

0748 M

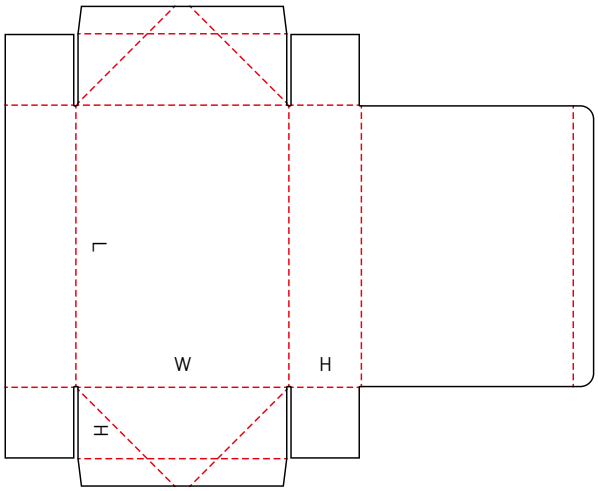

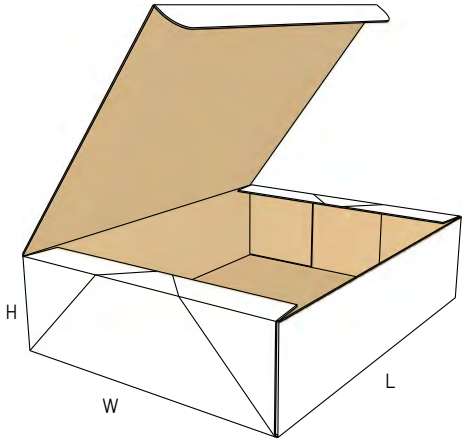

0751 M

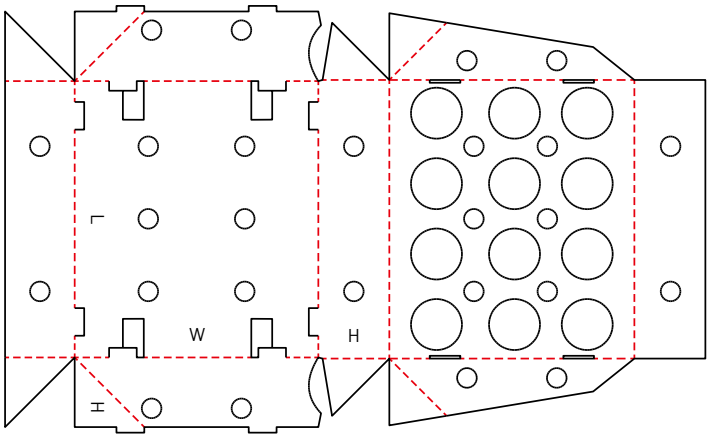

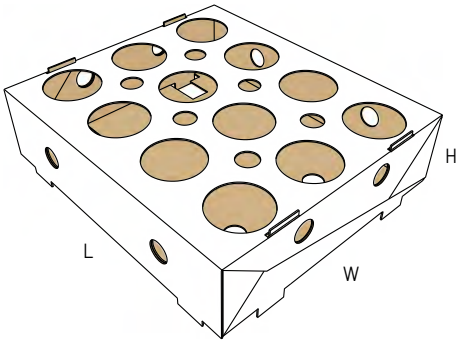

0752 M

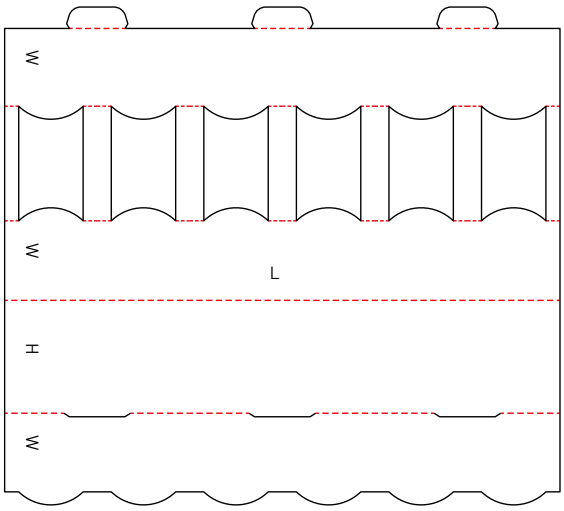

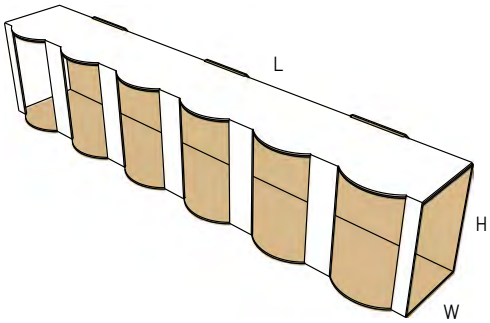

0759 M

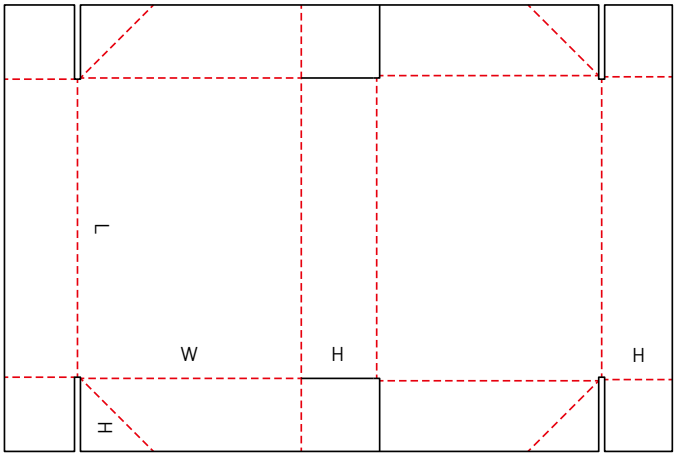

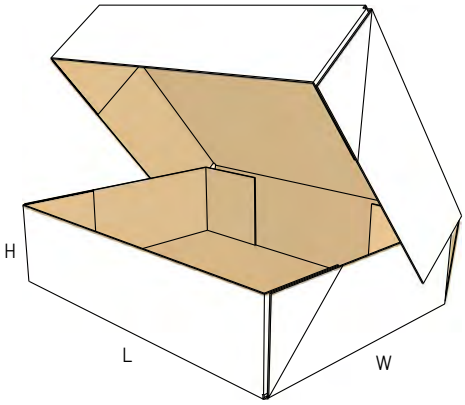

0761 M

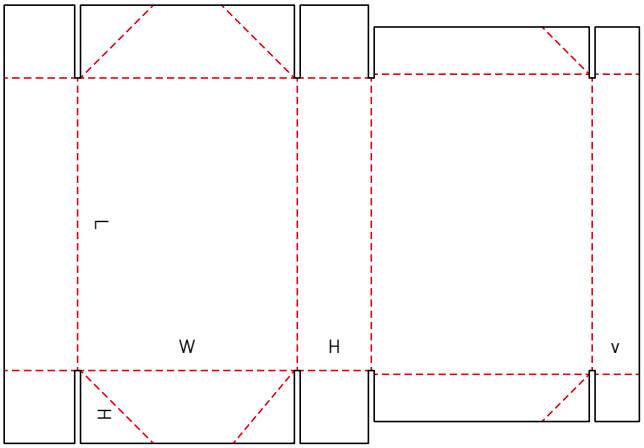

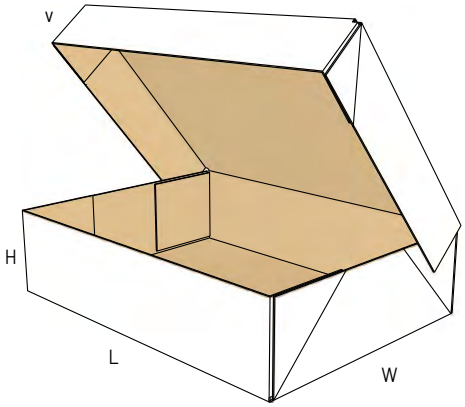

0770 M

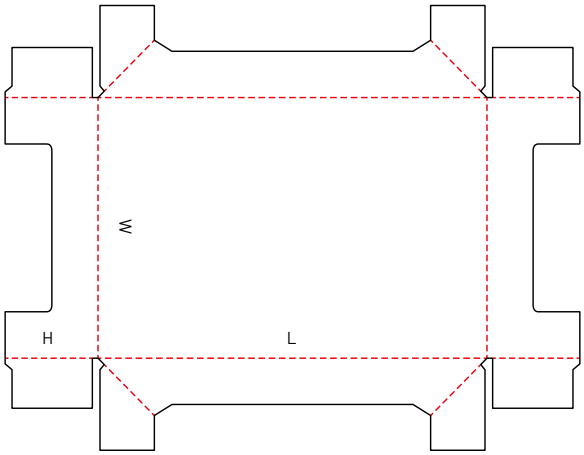

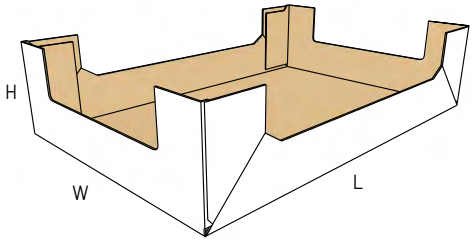

0771 M

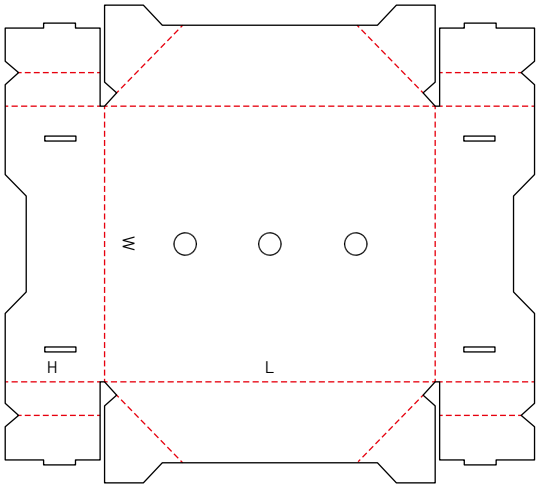

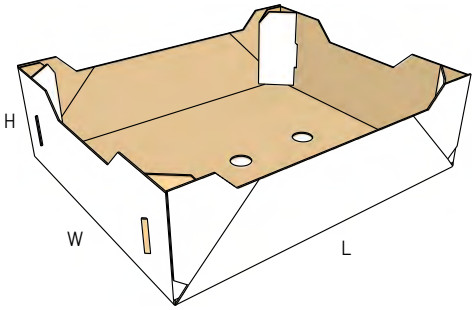

0772 M

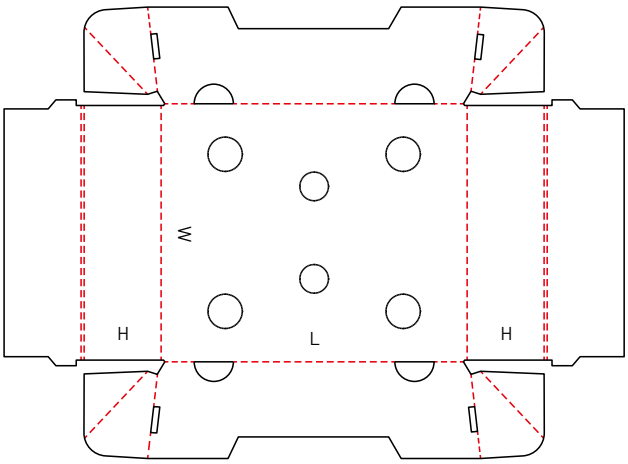

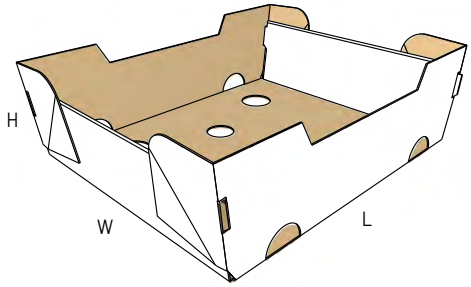

0773 M

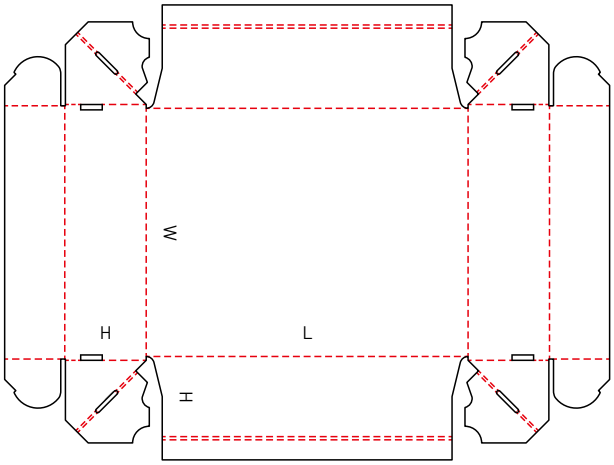

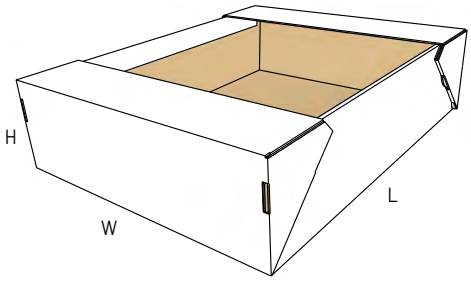

0774 M

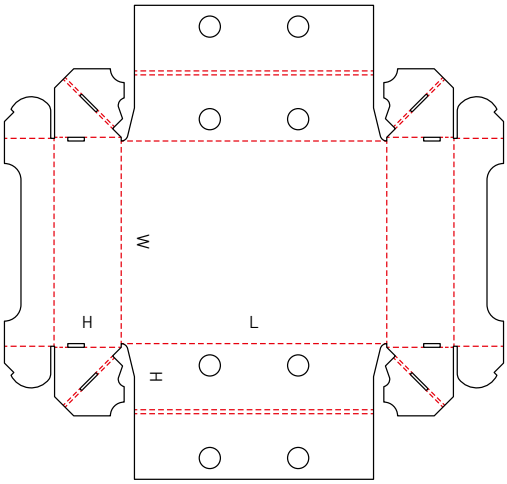

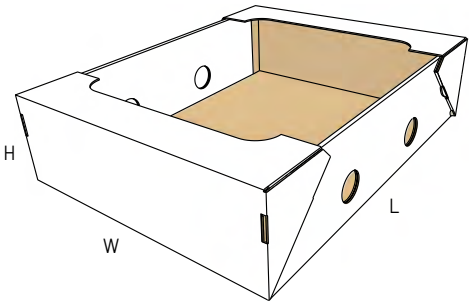

RETAIL AND E-COMMERCE PACKAGING

(Perakende Ve E-Ticaret Kutuları)

EN - Retail and e-commerce packaging category shows the typical styles used for Point of Sale (POS) displays and trays as well as styles for the online trade.

TR - Genellikle perakende ve e-ticarete yönelik kutulardır.

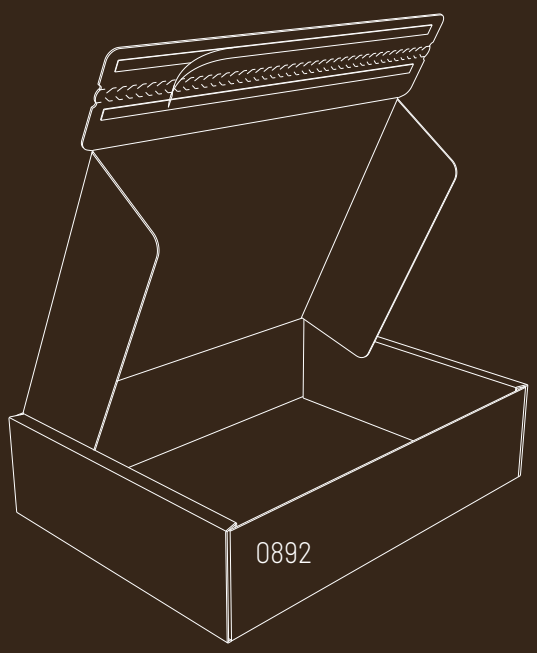

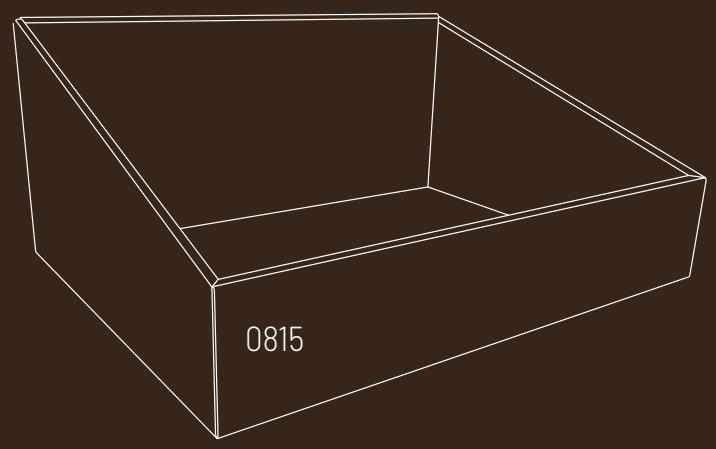

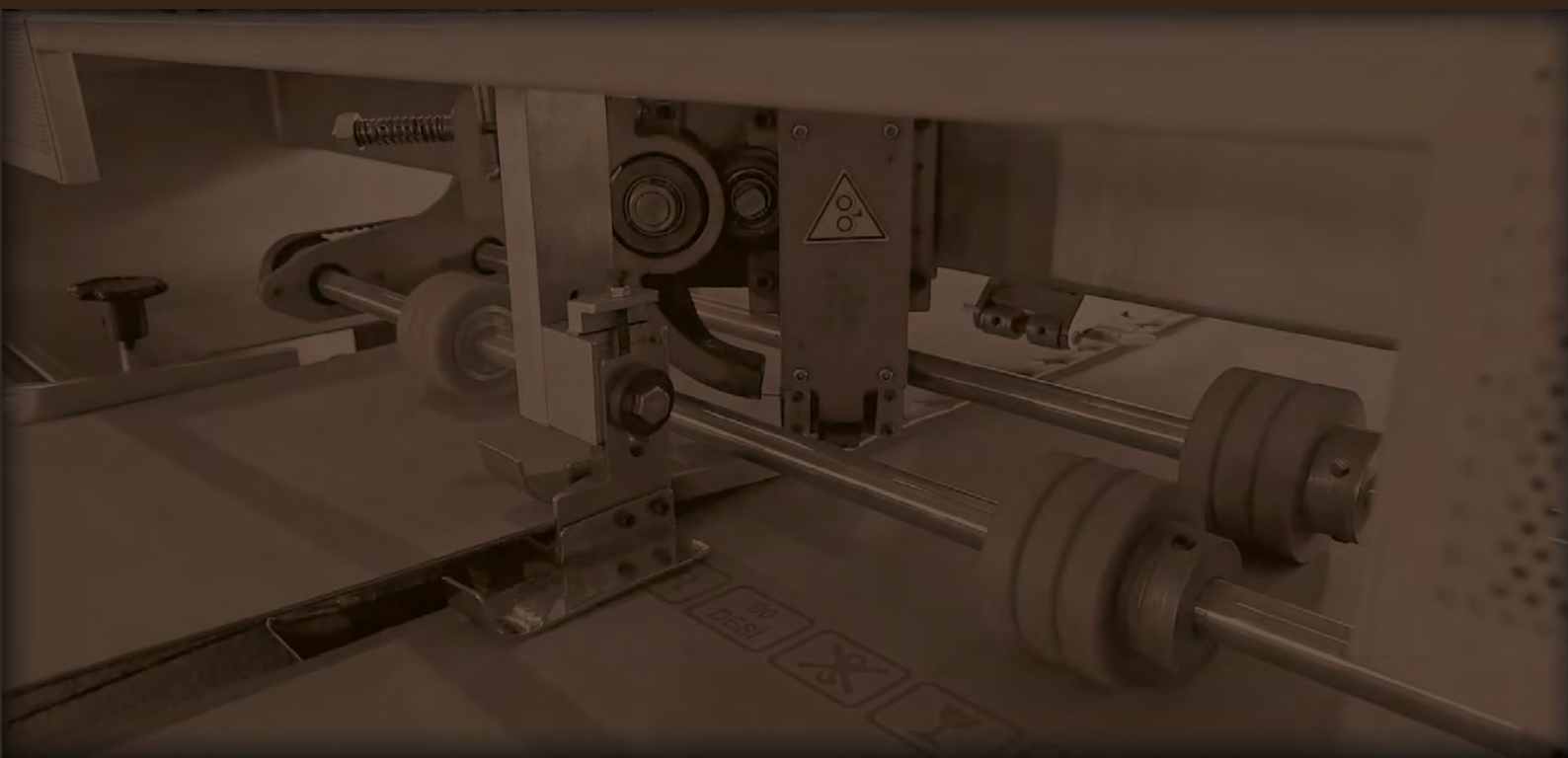

0801 M
NEW

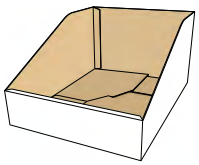

0802 M/A
NEW

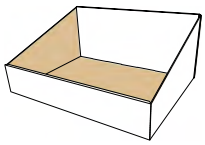

0803 M
NEW

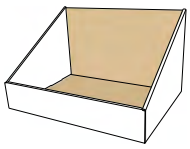

0804 M
NEW

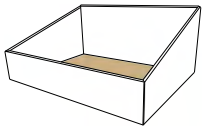

0808 M
NEW

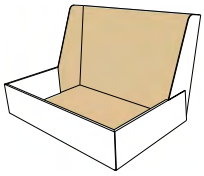

0809 M
NEW

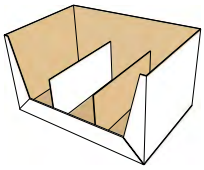

0815 M
NEW

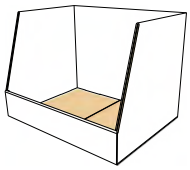

0816 M
NEW

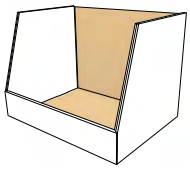

0817 M
NEW

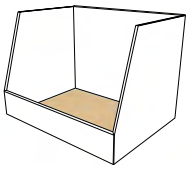

0818 M
NEW

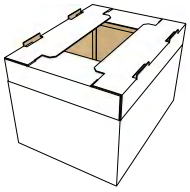

0819 M
NEW

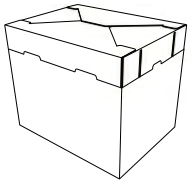

0825 M
NEW

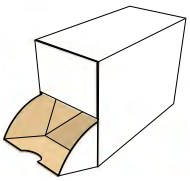

0826 M
NEW

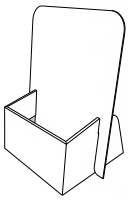

0830 M
NEW

0831 M
NEW

0832 M
NEW

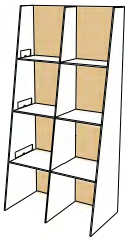

0833 M
NEW

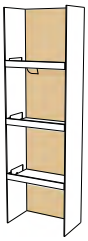

0834 M
NEW

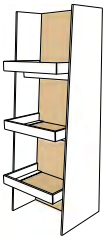

0840 M
NEW

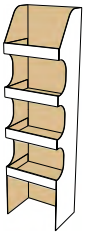

0841 M
NEW

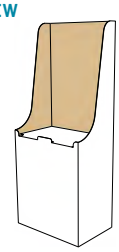

0842 M
NEW

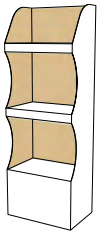

0843 M
NEW

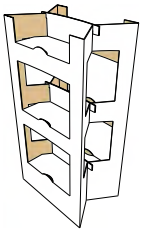

0845 M
NEW

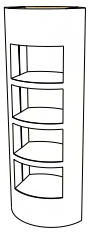

0846 M
NEW

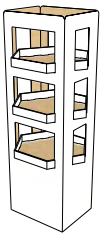

0847 M
NEW

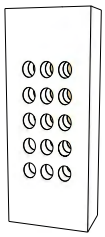

0848 M
NEW

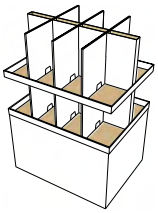

0849 M
NEW

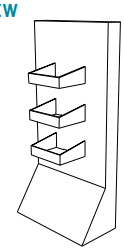

0850 M
NEW

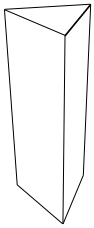

0851 M
NEW

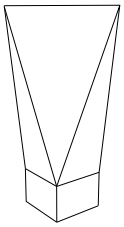

0852 M
NEW

0853 M
NEW

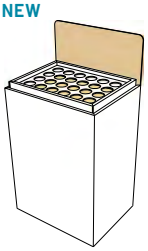

0854 M
NEW

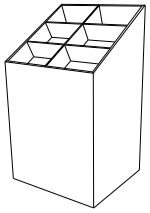

0858 M
NEW

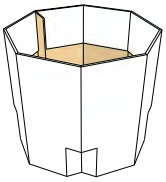

0859 M
NEW

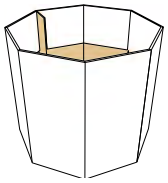

0860 M
NEW

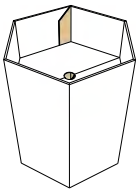

0861 M
NEW

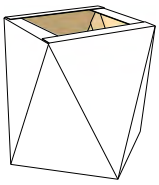

0865 M
NEW

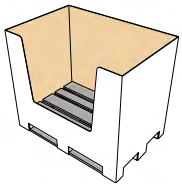

0866 M
NEW

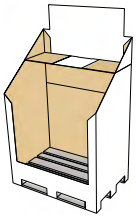

0870 M
NEW

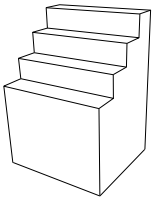

0871 M
NEW

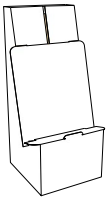

0872 M
NEW

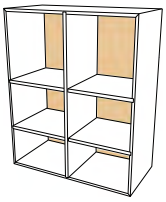

0873 M
NEW

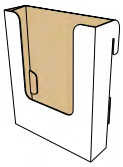

0874 M
NEW

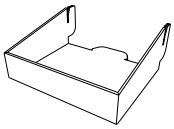

0880 M
NEW

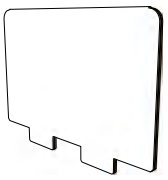

0881 M
NEW

0882 M
NEW

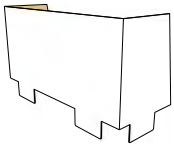

0885 M
NEW

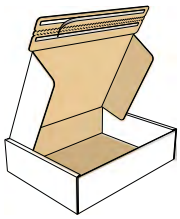

0886 M
NEW

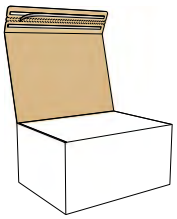

0887 M
NEW

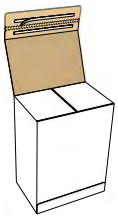

0801 M

NEW

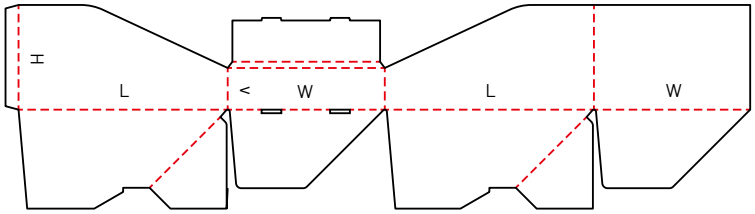

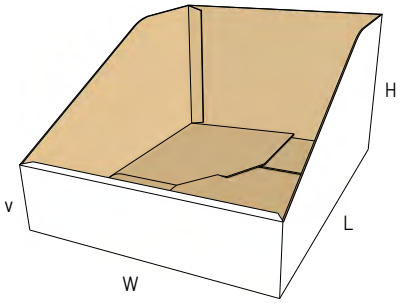

0802 M/A

NEW

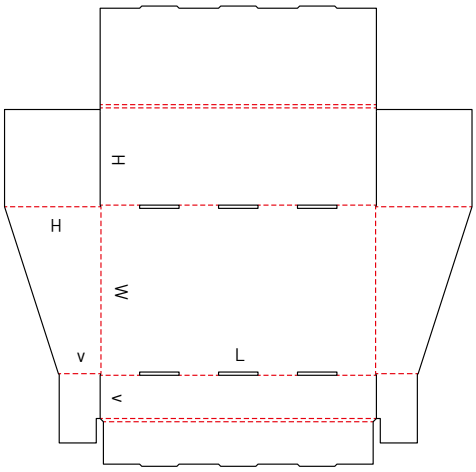

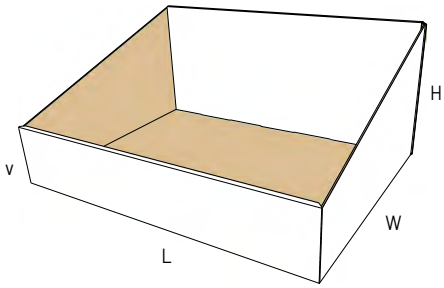

0803 M

NEW

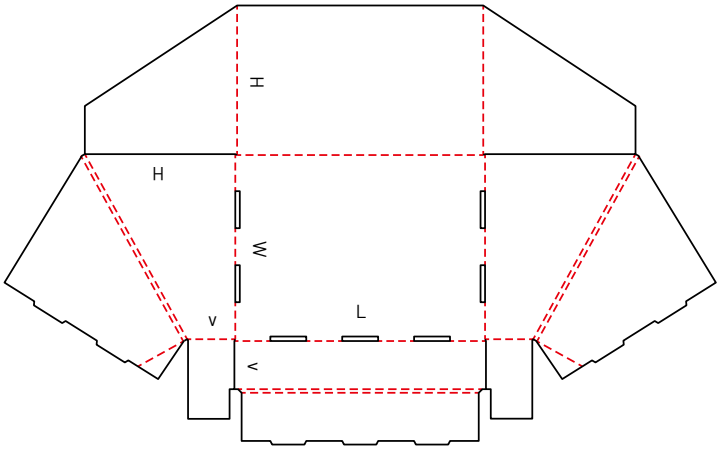

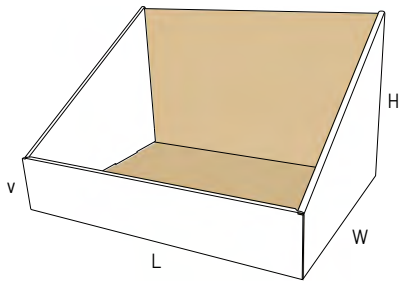

0804 M

NEW

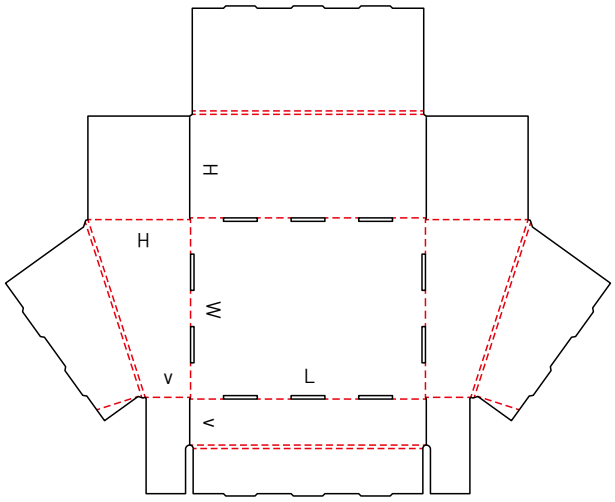

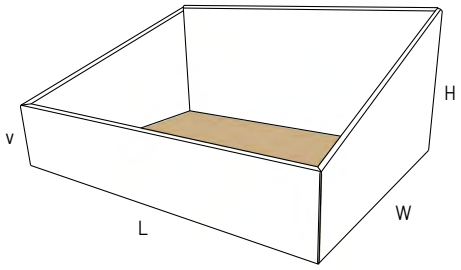

0808 M

NEW

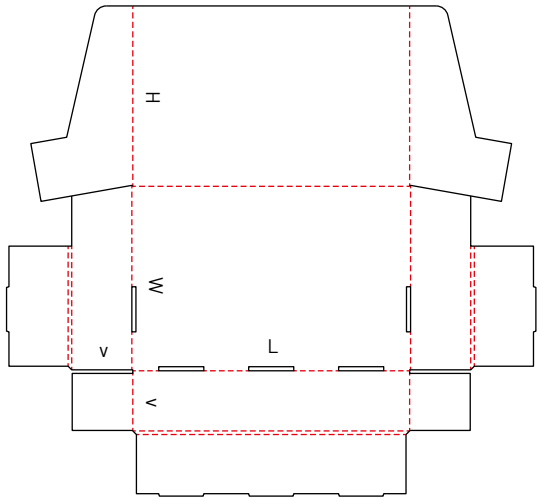

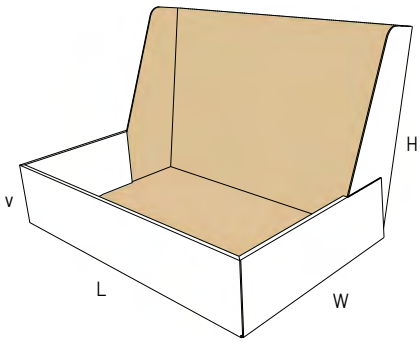

0809 M

NEW

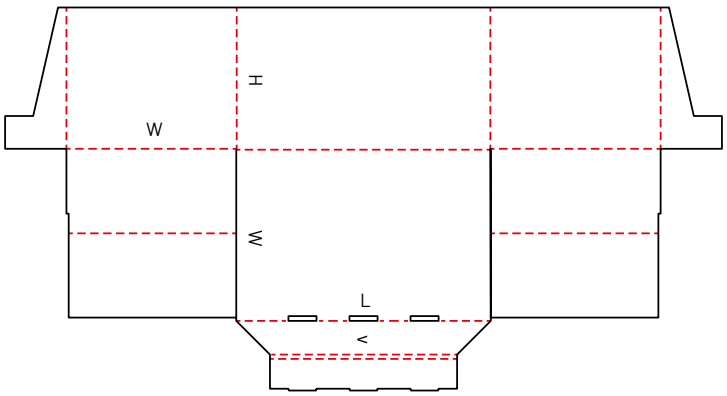

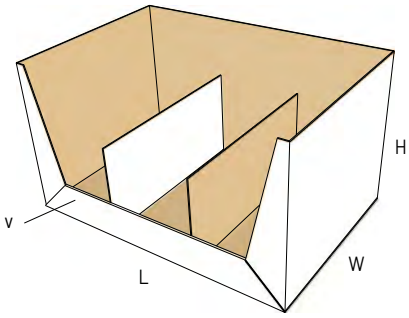

0815 M

NEW

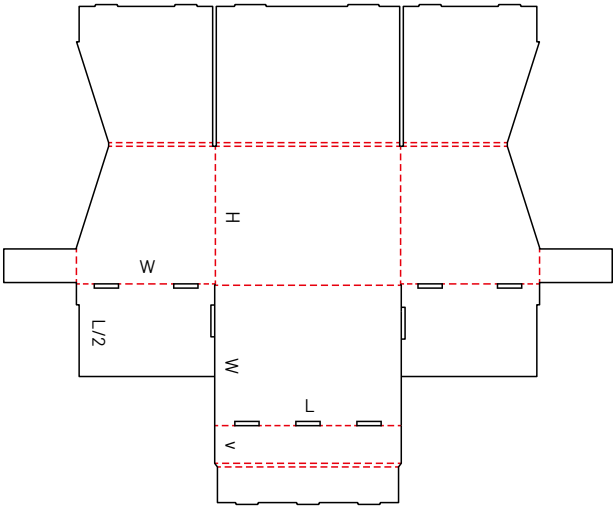

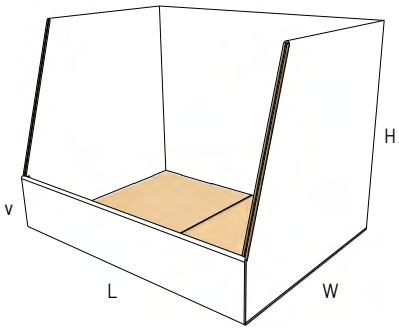

0816 M

NEW

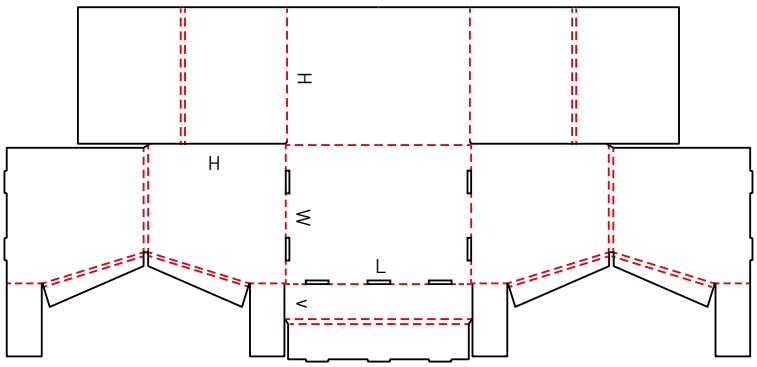

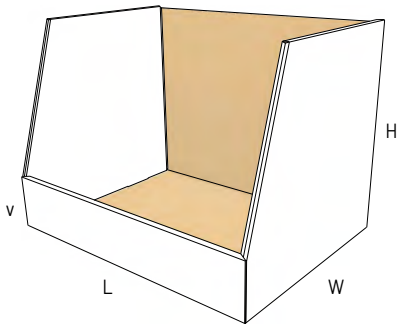

0817 M

NEW

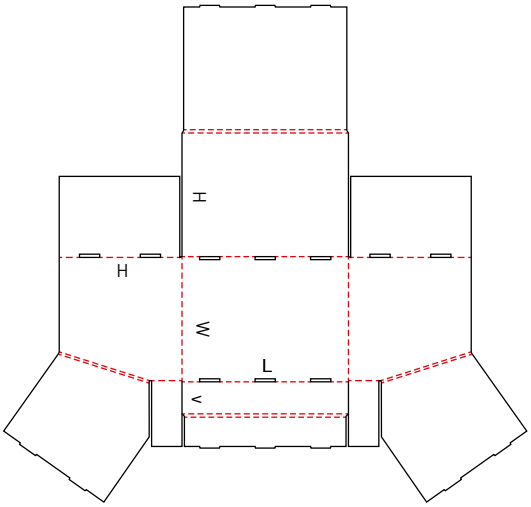

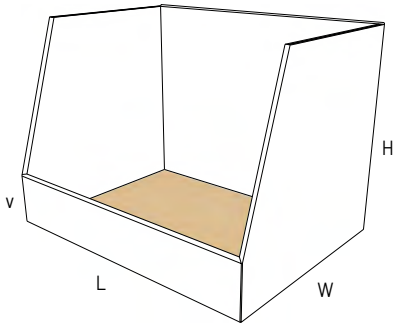

0818 M

NEW

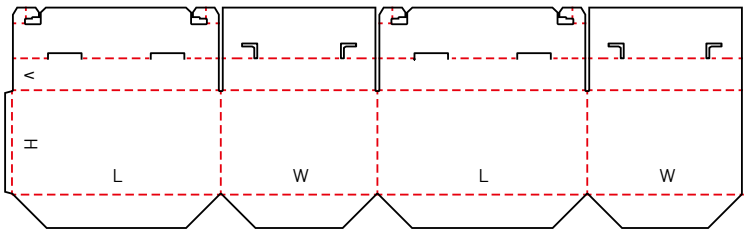

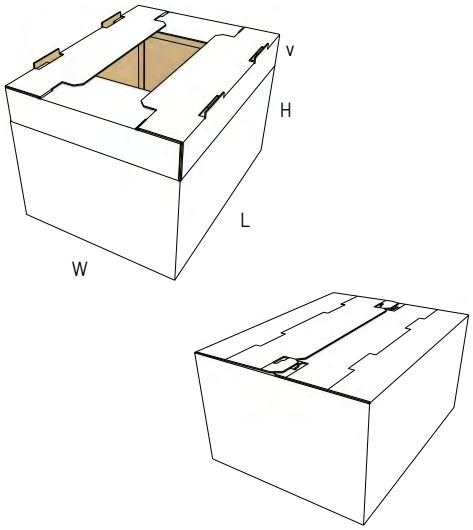

0819 M

NEW

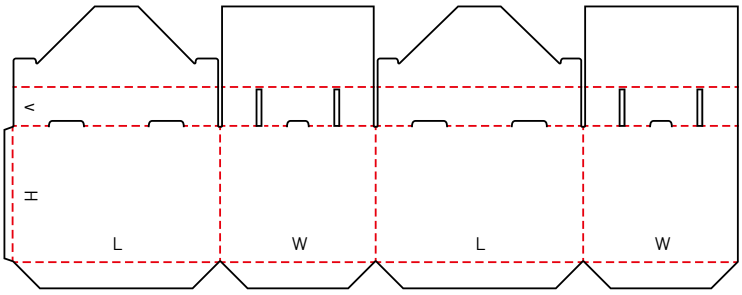

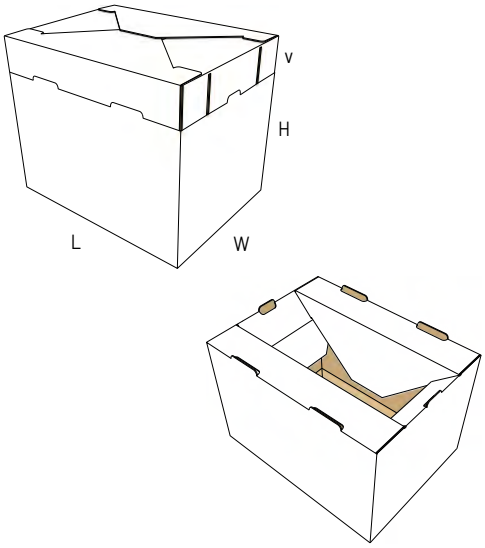

0825 M

NEW

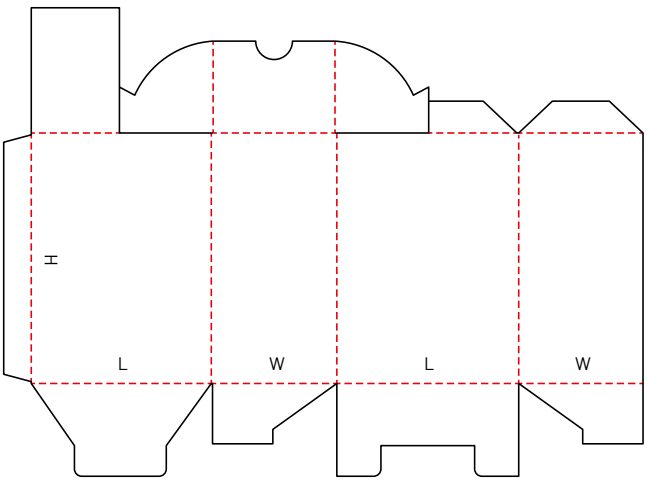

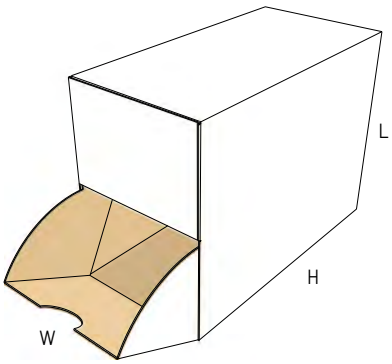

0826 M

NEW

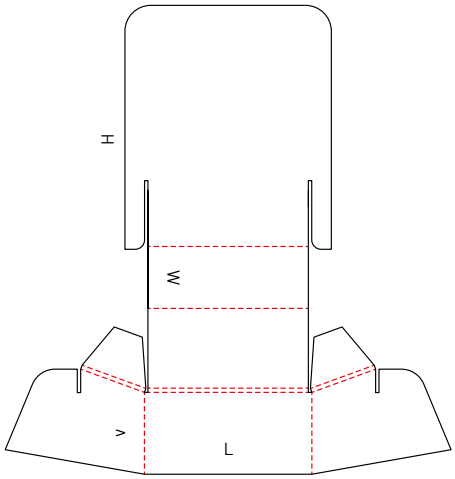

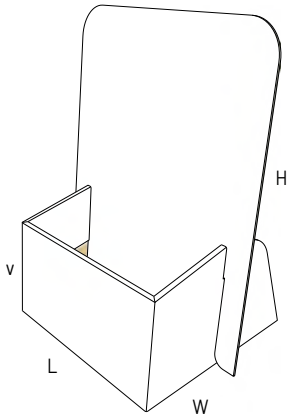

0830 M

NEW

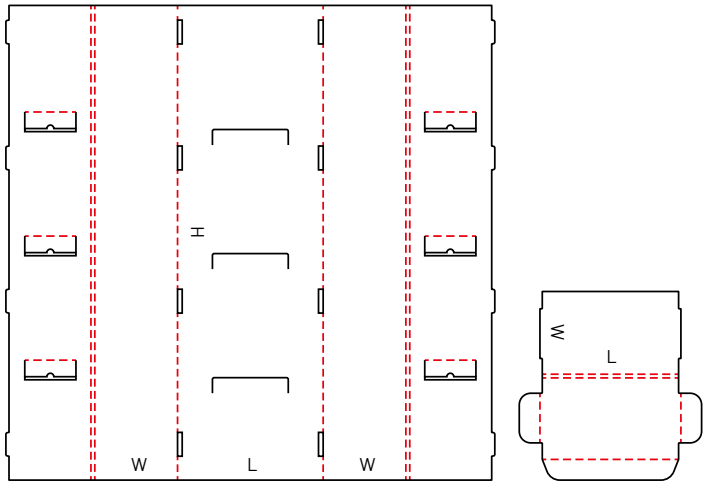

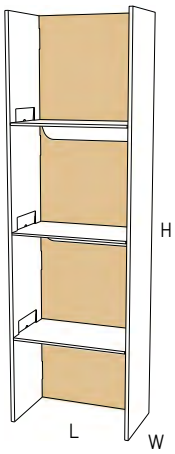

0831 M

NEW

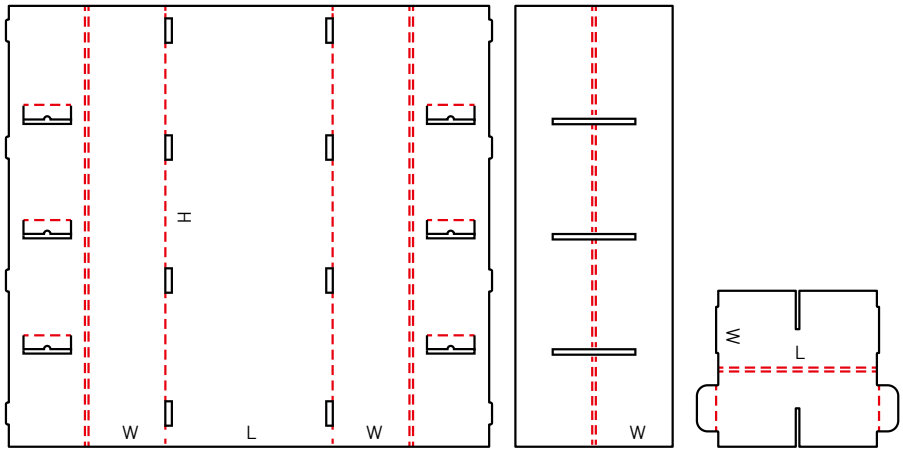

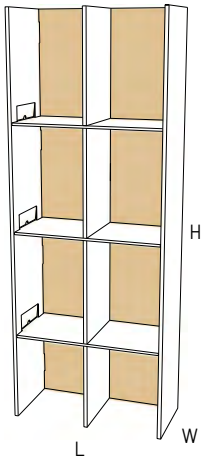

0832 M

NEW

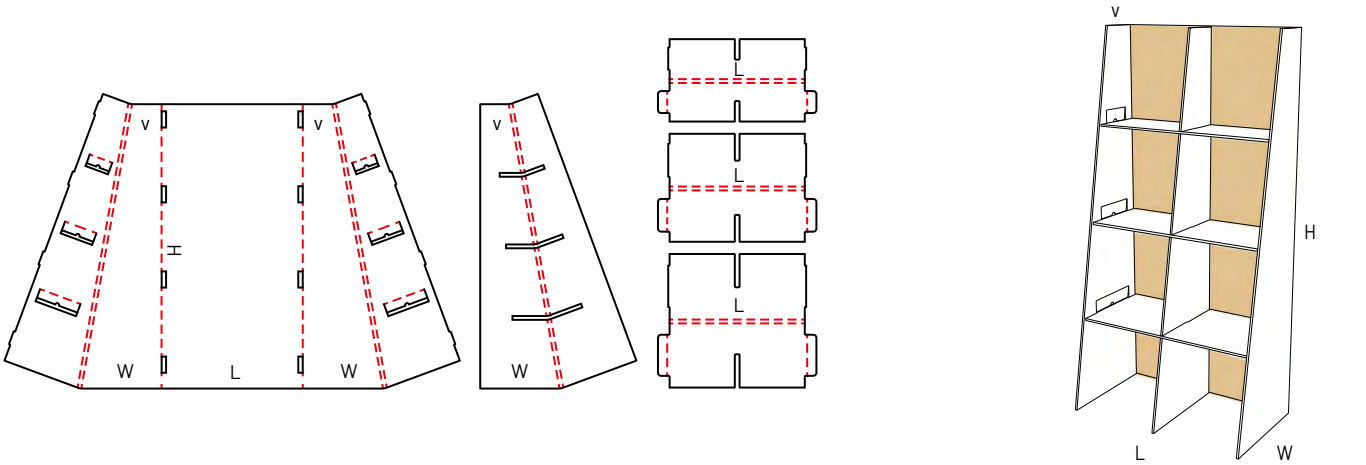

0833 M

NEW

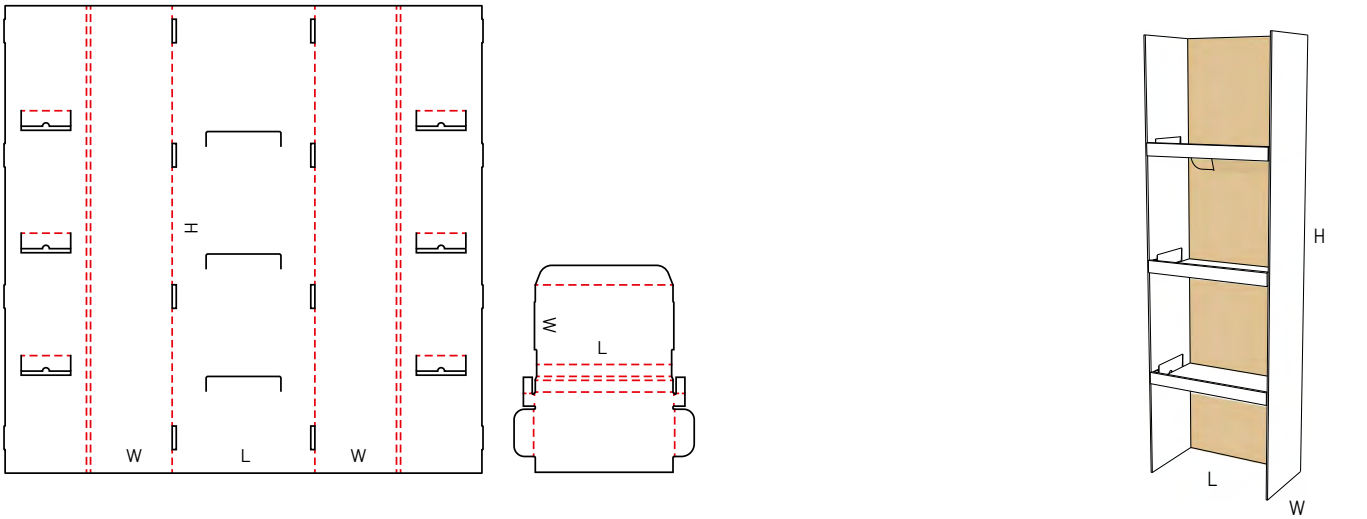

0834 M

NEW

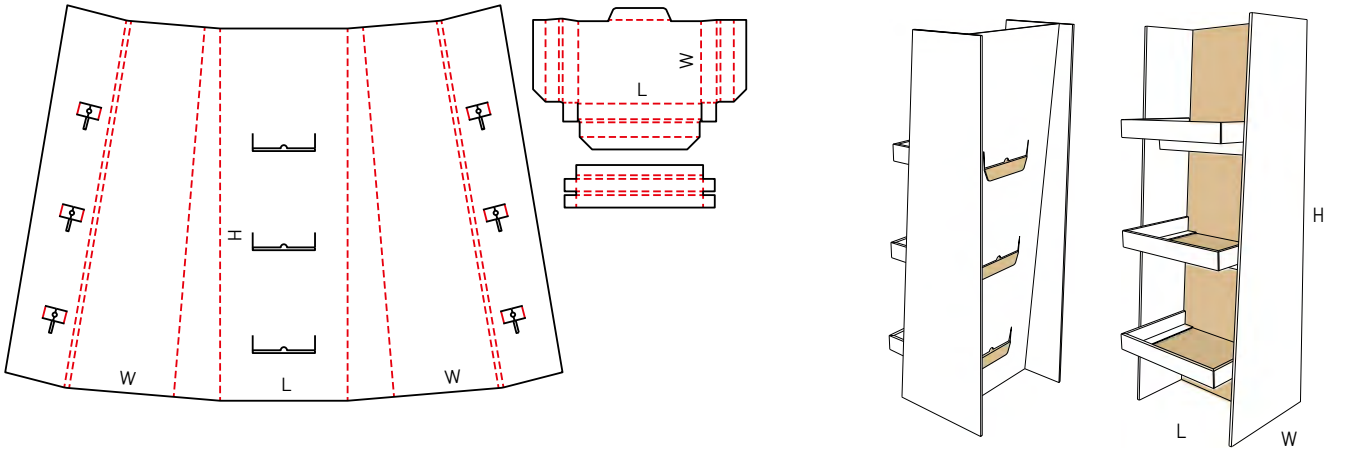

0840 M

NEW

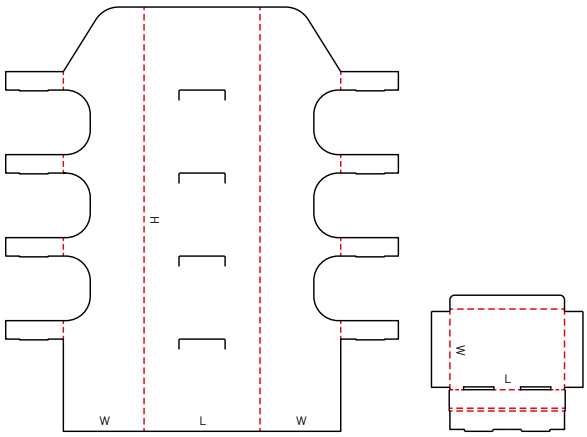

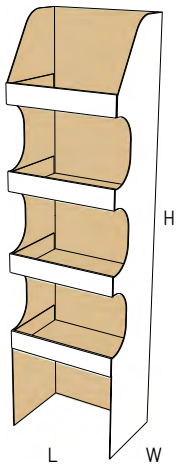

0841 M

NEW

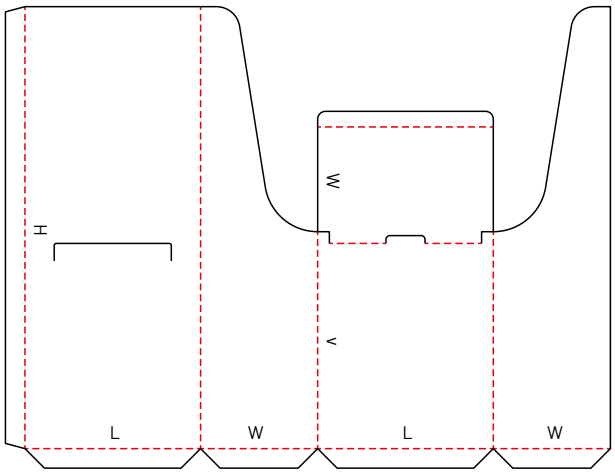

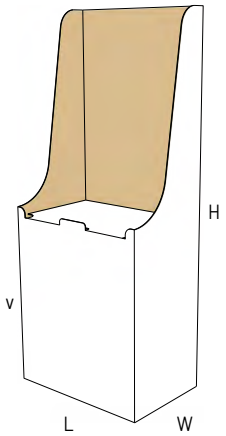

0842 M

NEW

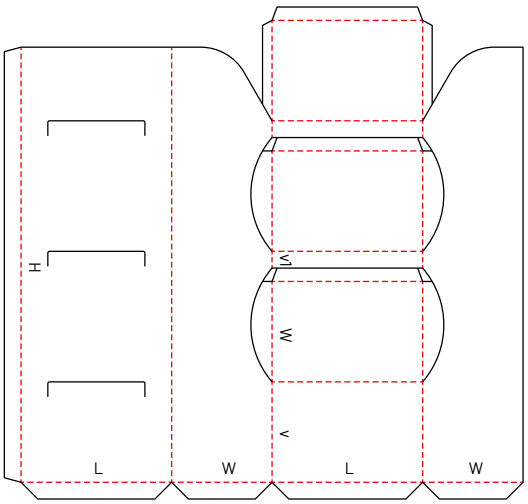

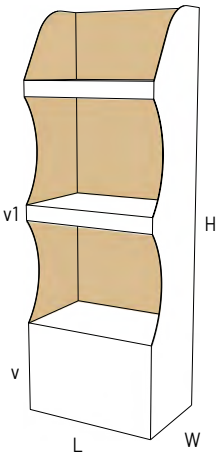

0843 M

NEW

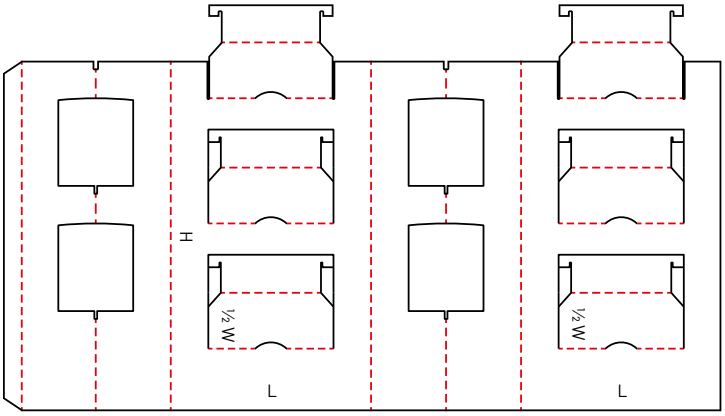

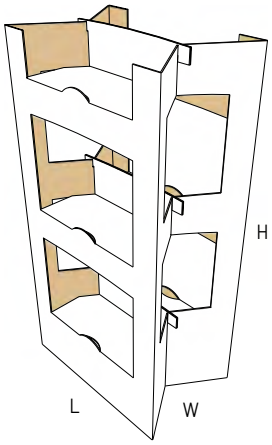

0845 M

NEW

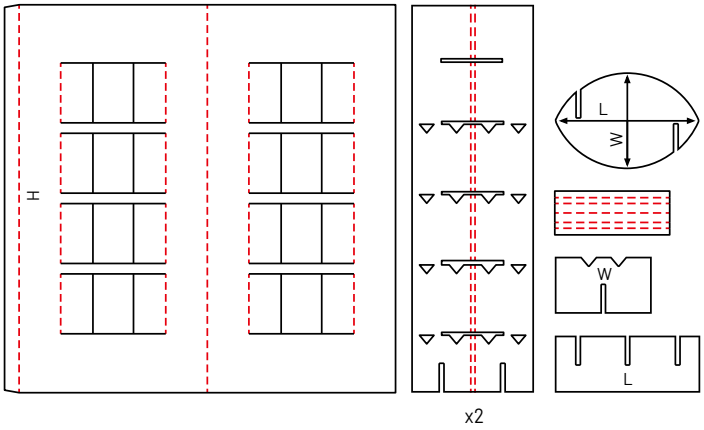

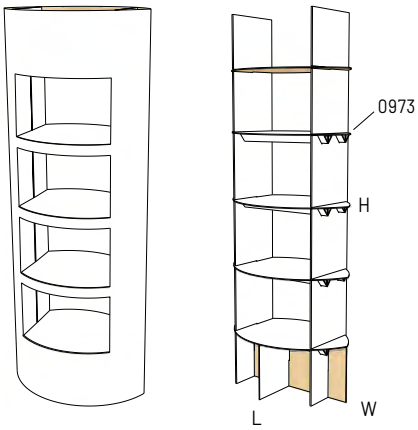

0846 M

NEW

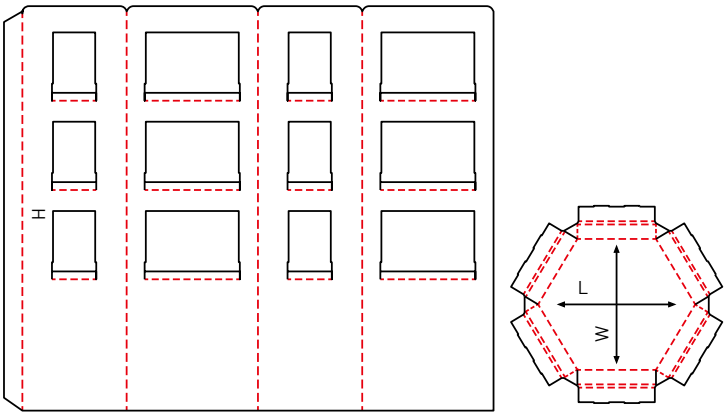

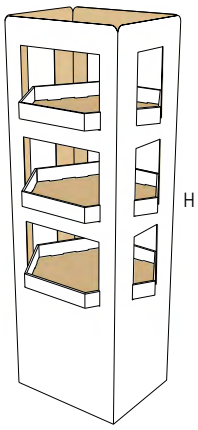

0847 M

NEW

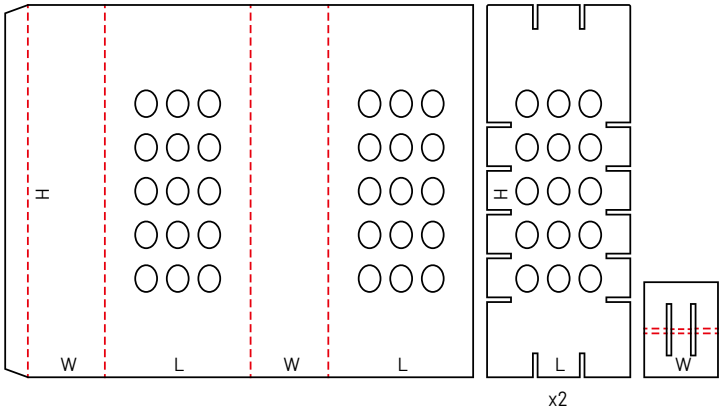

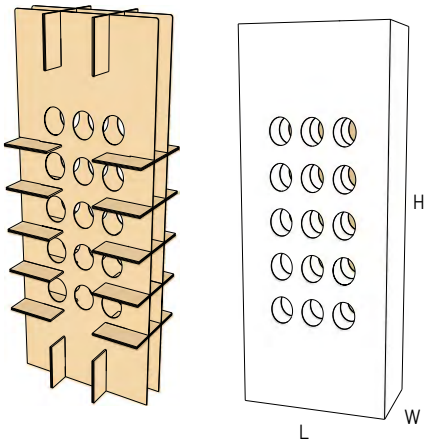

0848 M

NEW

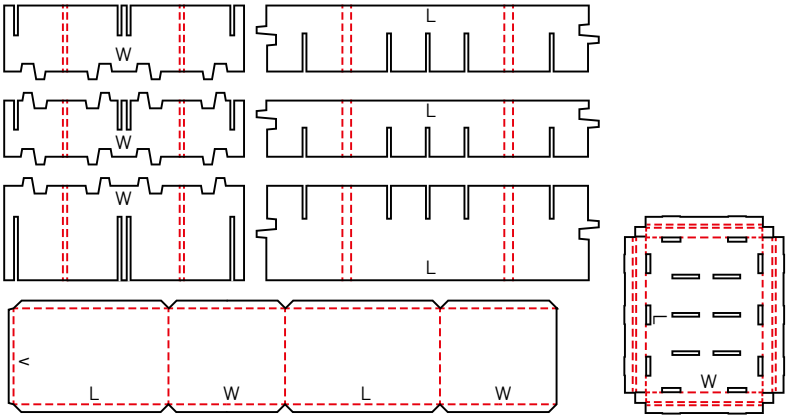

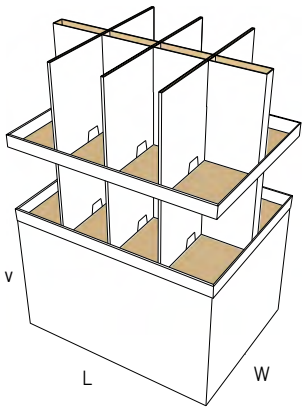

0849 M

NEW

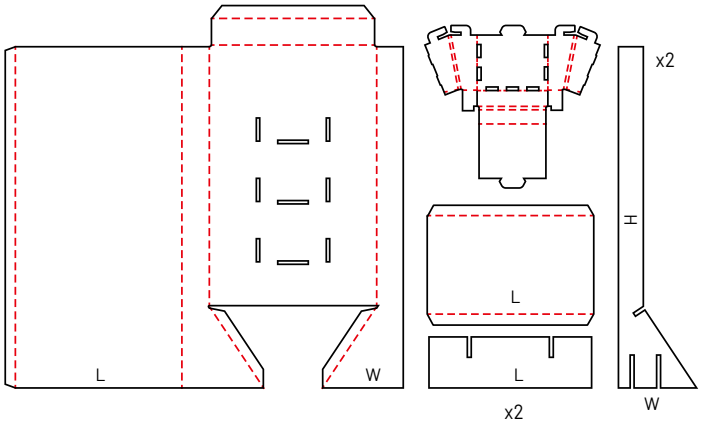

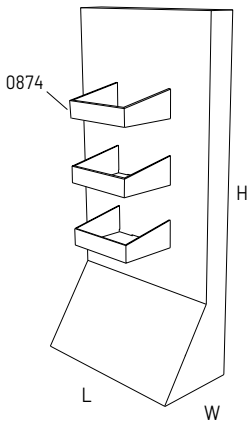

0850 M

NEW

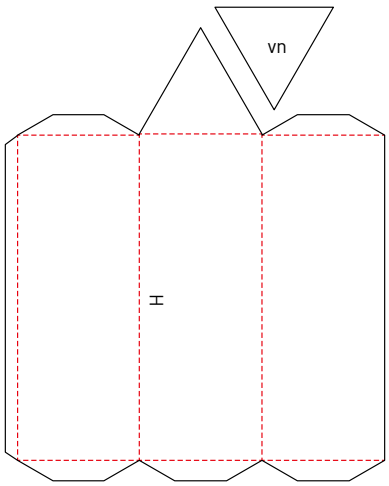

Design style could vary
with multiple number of sides (vn)

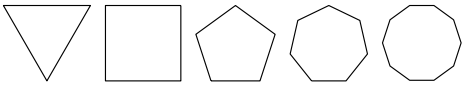

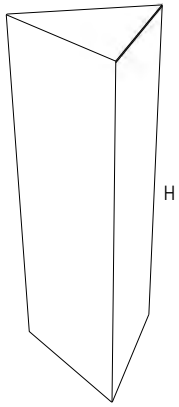

0851 M

NEW

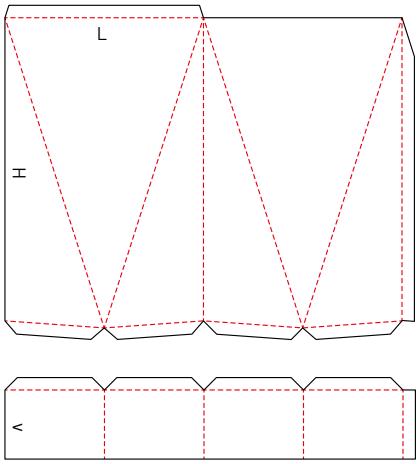

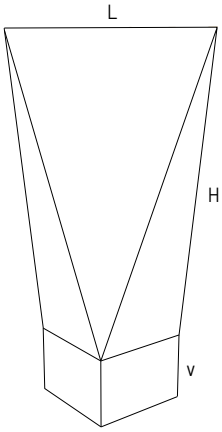

0852 M

NEW

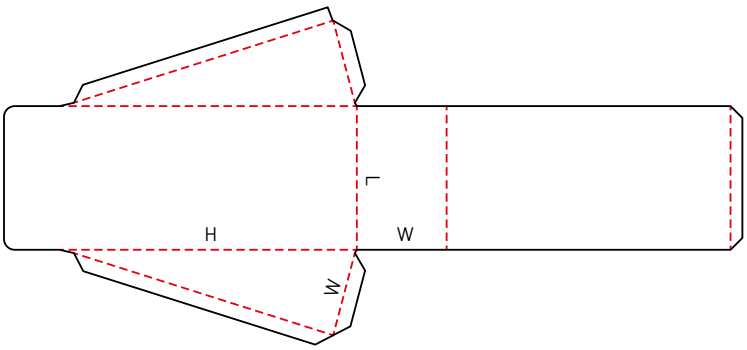

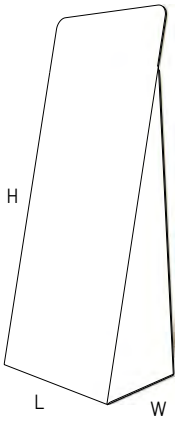

0853 M

NEW

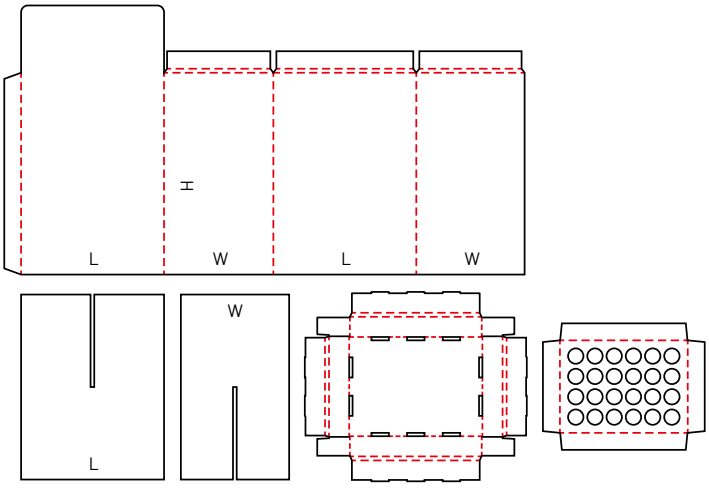

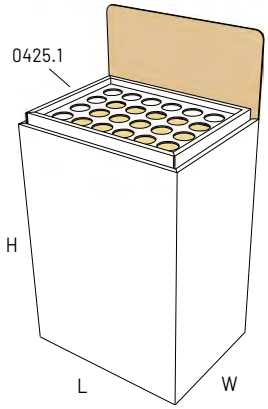

0854 M

NEW

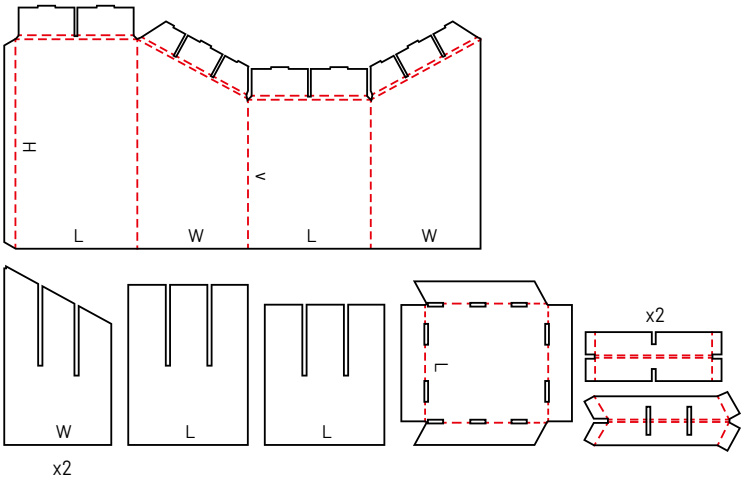

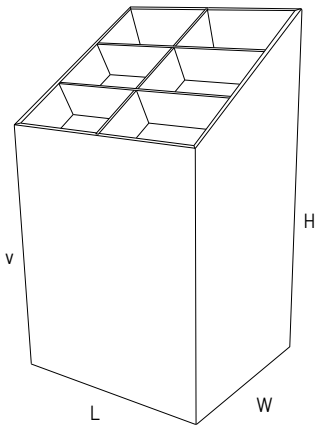

0858 M

NEW

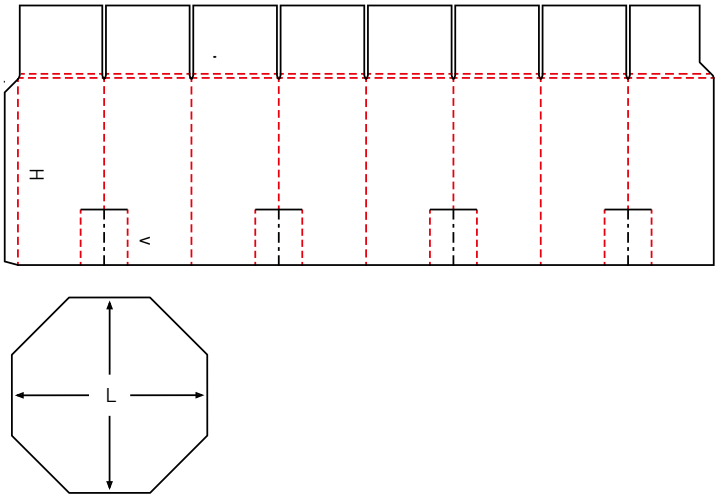

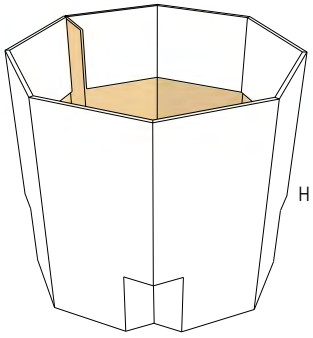

0859 M

NEW

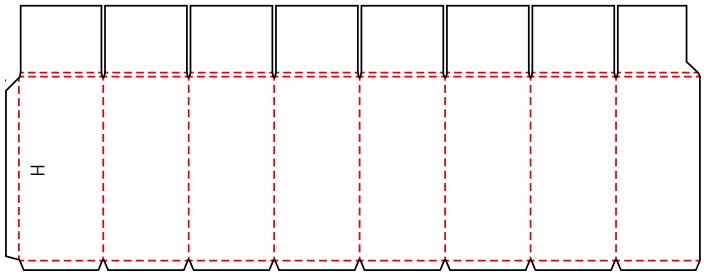

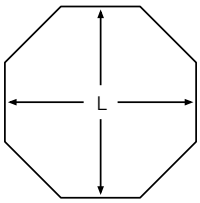

Design style could vary
with multiple number of sides (vn)

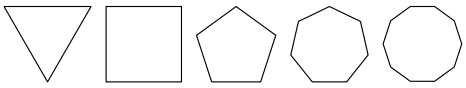

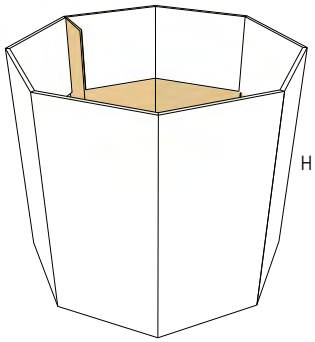

0860 M

NEW

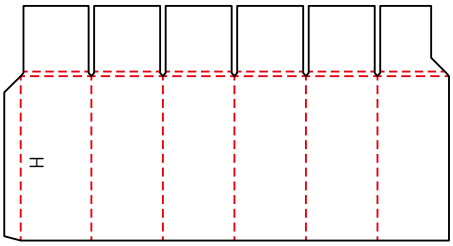

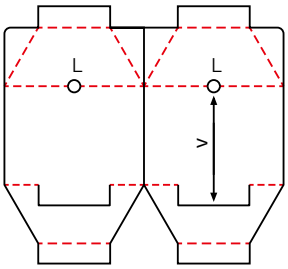

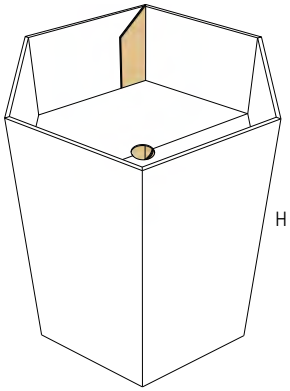

0861 M

NEW

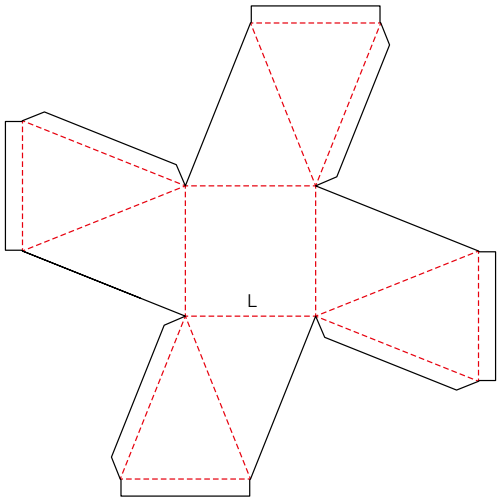

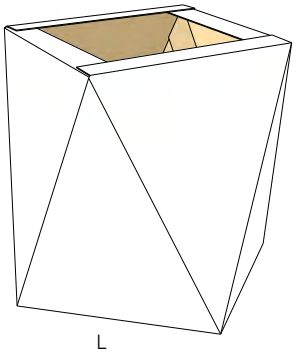

0865 M

NEW

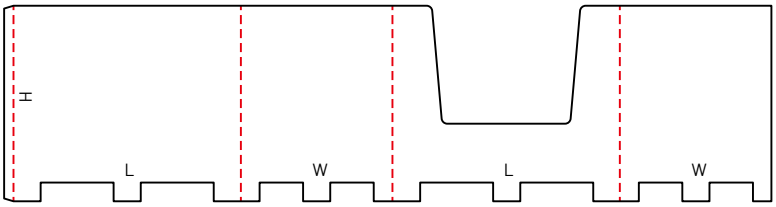

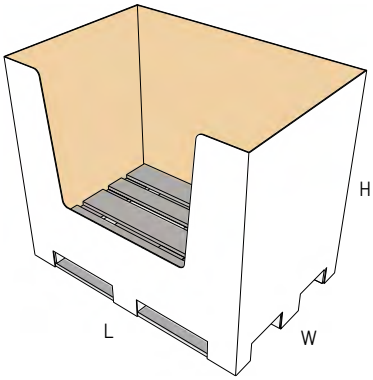

0866 M

NEW

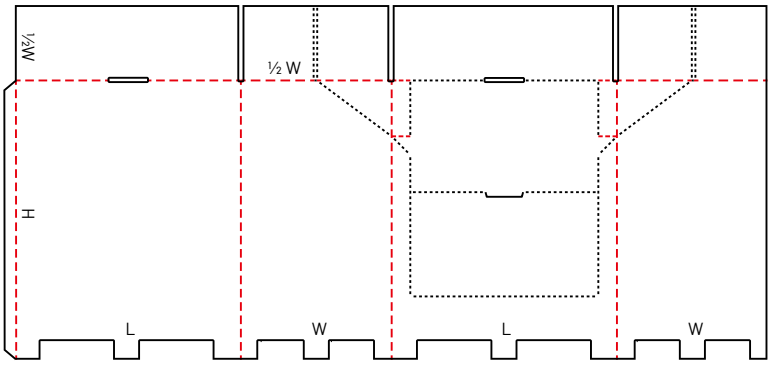

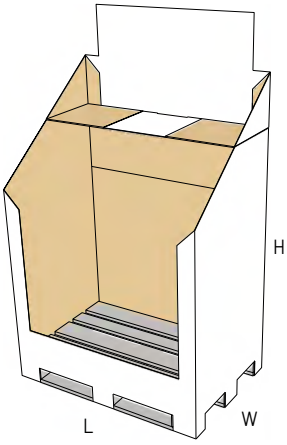

0870 M

NEW

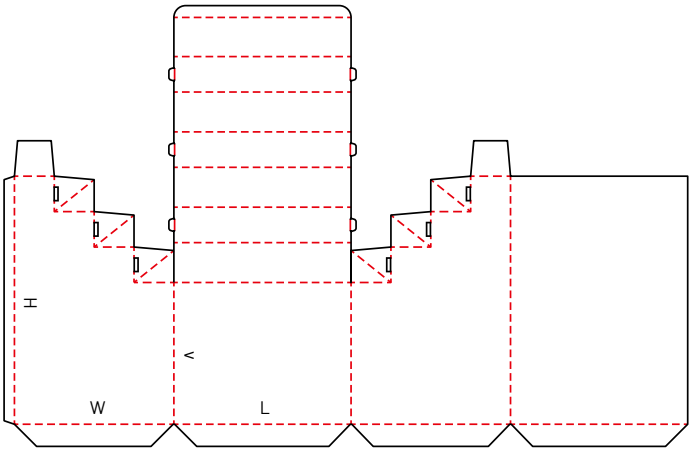

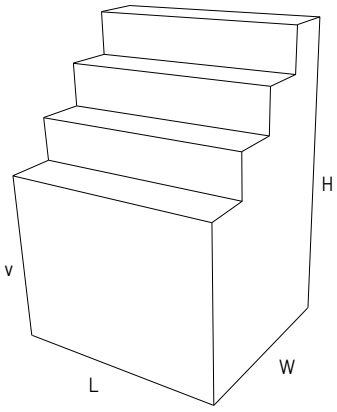

0871 M

NEW

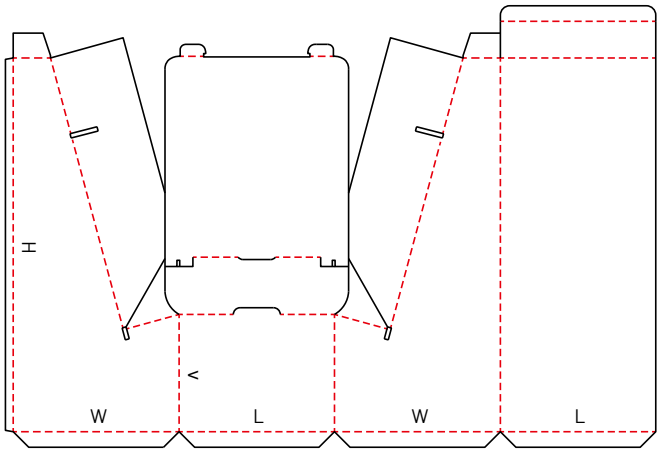

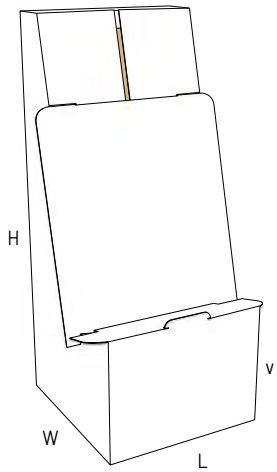

0872 M

NEW

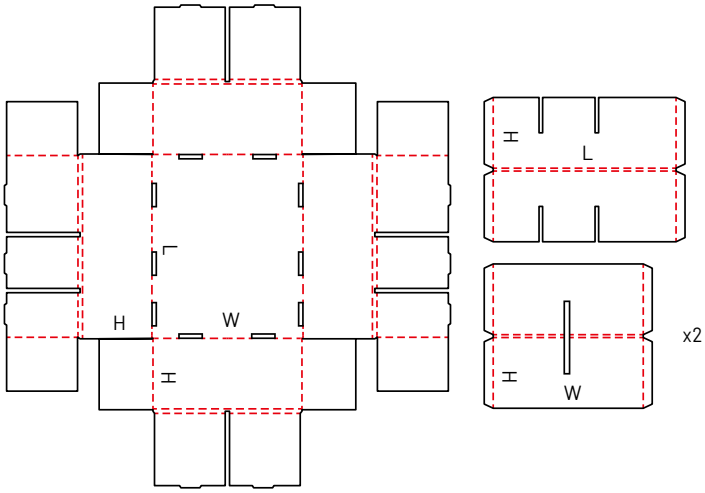

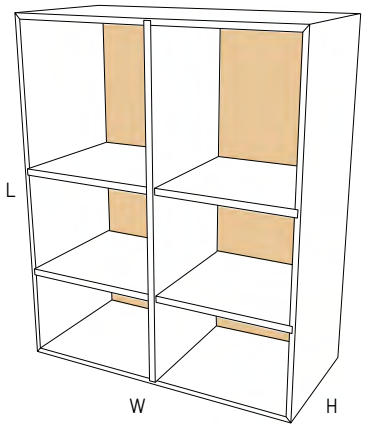

0873 M

NEW

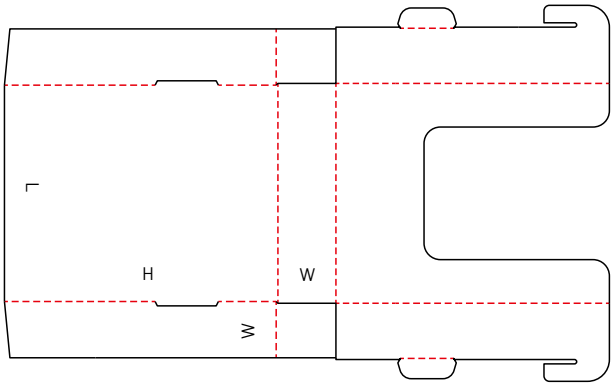

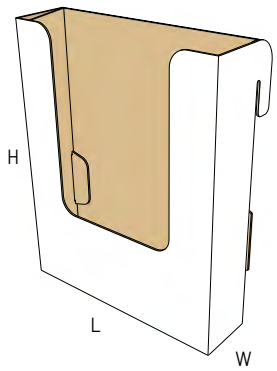

0874 M

NEW

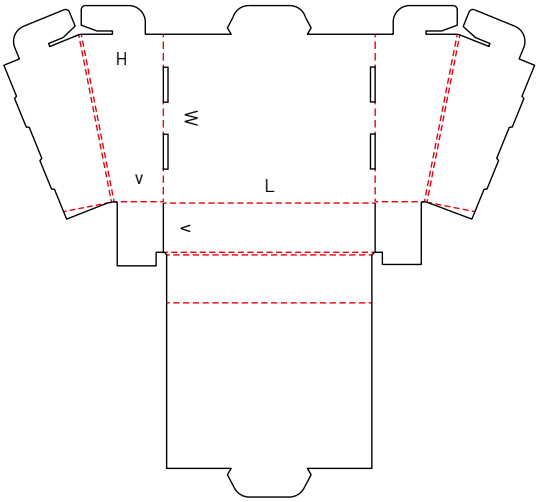

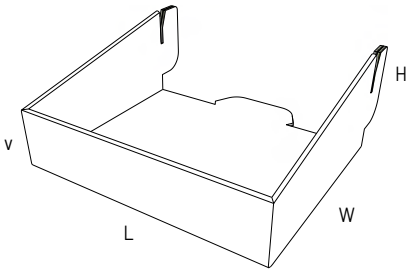

0880 M

NEW

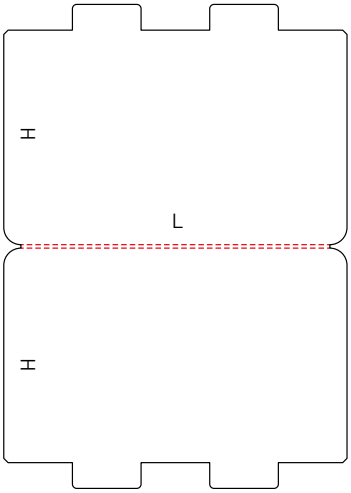

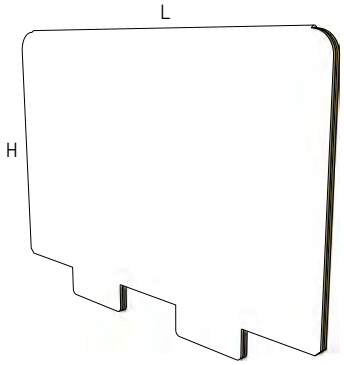

0881 M

NEW

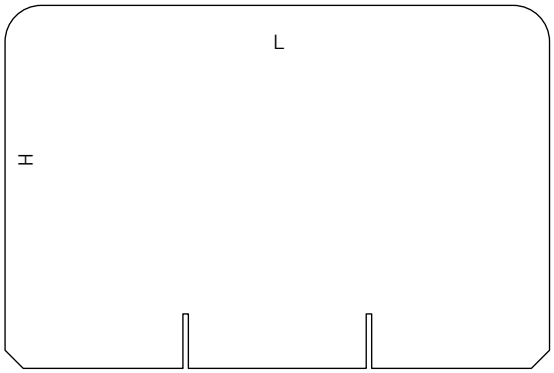

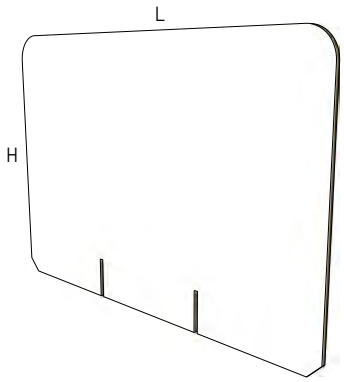

0882 M

NEW

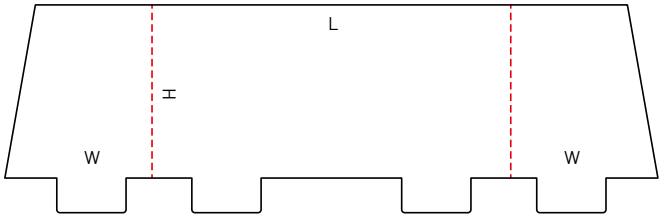

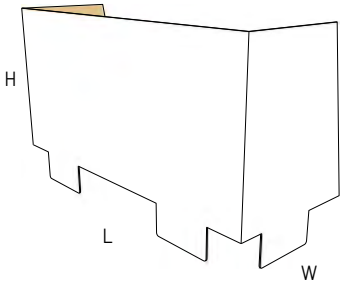

0885 M

NEW

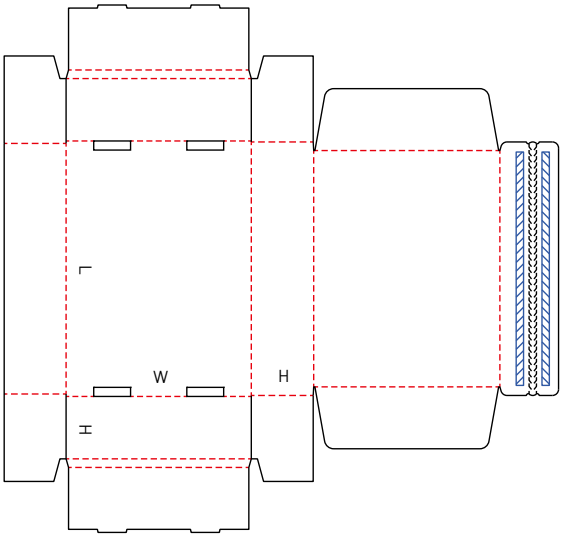

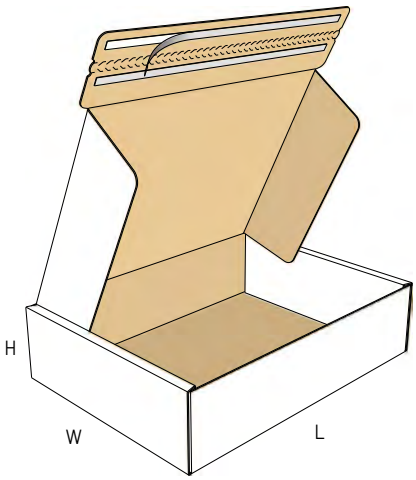

0886 M

NEW

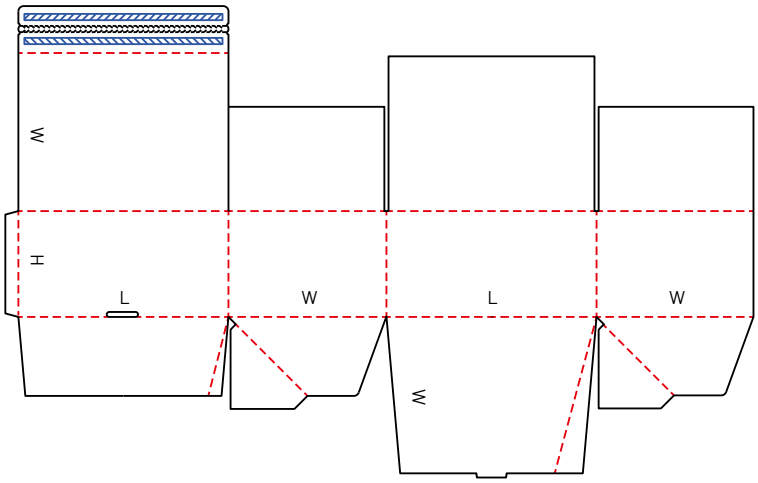

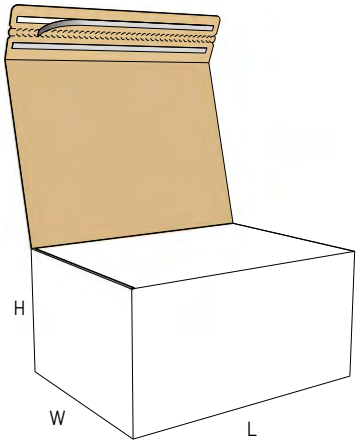

0887 M

NEW

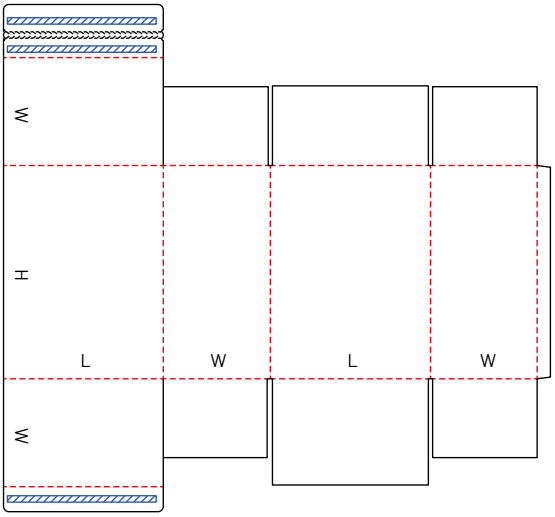

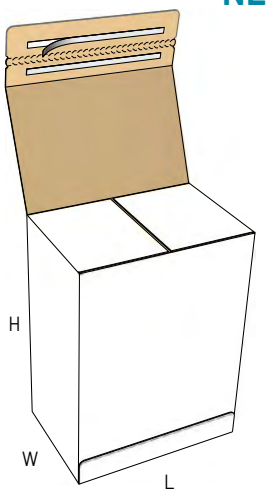

INTERIOR FITMENTS

(Separatörler)

EN - Interior fitments such as inside liners, pads, partitions, dividers, etc. whether integrated in the box design or as separate items. Any shown number of panels is arbitrary and may be increased or decreased as required.

TR - Separatörler kutununun içine konulacak ürünlerin birbirine temasını engellemek için kullanılmaktadır.

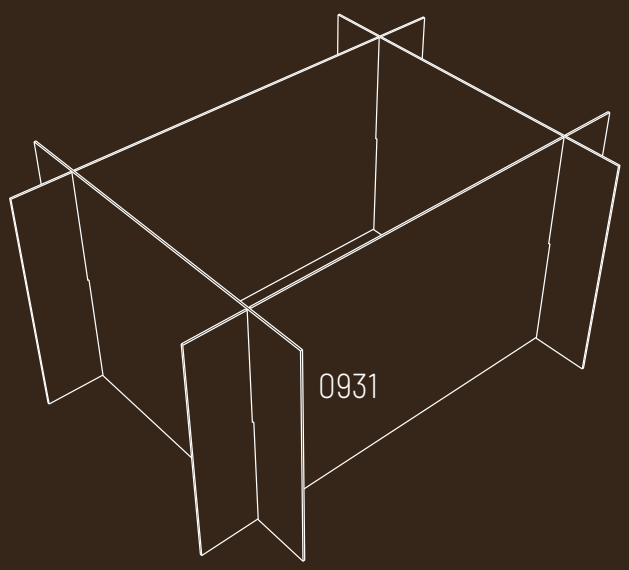

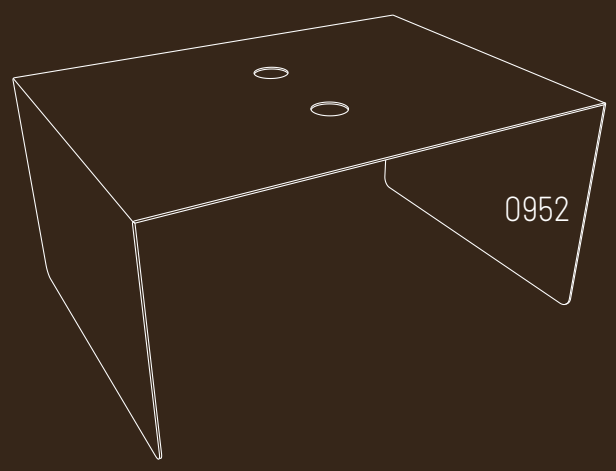

0900 M/A

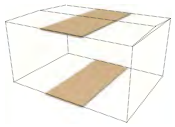

0901 M/A

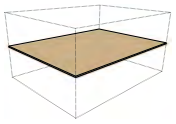

0902 M/A

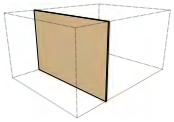

0903 M/A

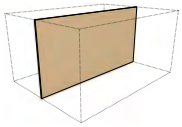

0904 M/A

0905 M/A

0906 M/A

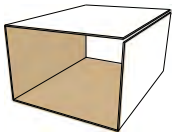

0907 M/A

0908 M/A

0909 M/A

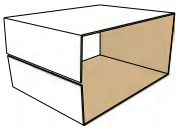

0910 M/A

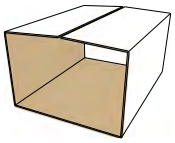

0911 M/A

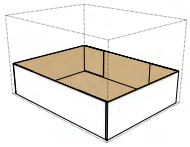

0912 M/A
NEW

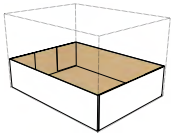

0913 M

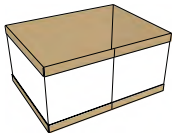

0914 M

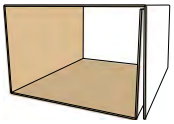

0920 M

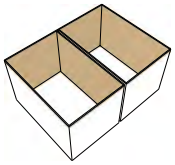

0921 M

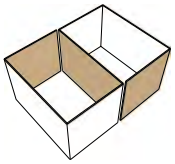

0929 M

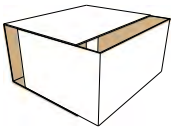

0930 M

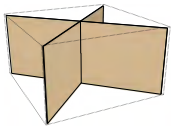

0931 M

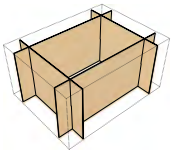

0932 M

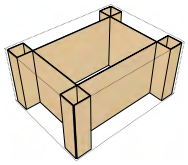

0933 M

0934 M

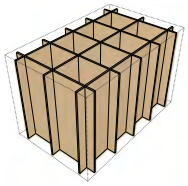

0935 M

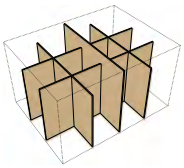

0936 M
NEW

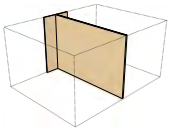

0937 M
NEW

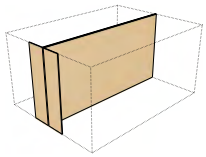

0938 M
NEW

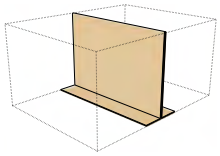

0939 M
NEW

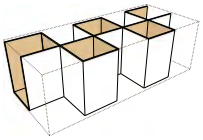

0940 M

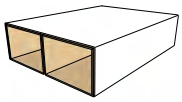

0941 M

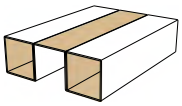

0942 M

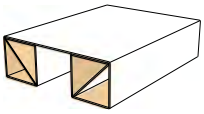

0943 M

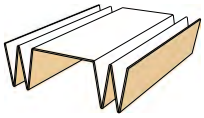

0944 M

0945 M

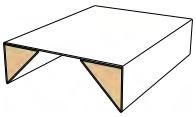

0946 M

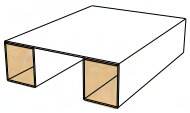

0947 M

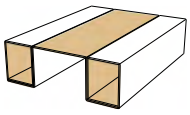

0948 M

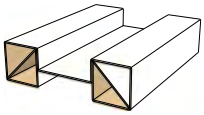

0949 M

0950 M

0951 M

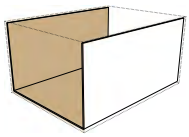

0952 M/A
NEW

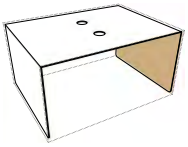

0953 M/A
NEW

0954 M
NEW

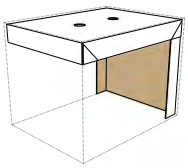

0955 M
NEW

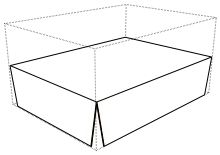

0960 M
NEW

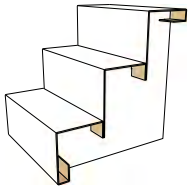

0965 M

0966 M

0967 M

0970 M

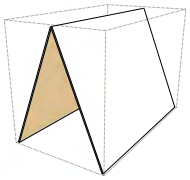

0971 M

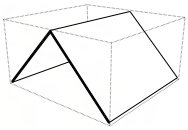

0972 M

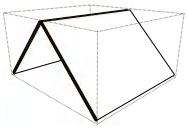

0973 M

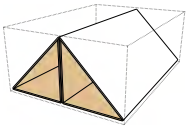

0974 M

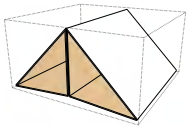

0975 M

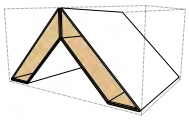

0976 M

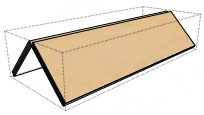

0900 M/A

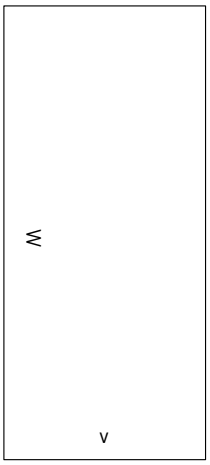

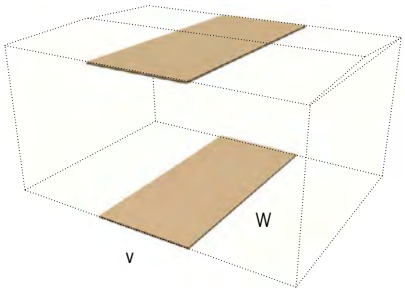

0901 M/A

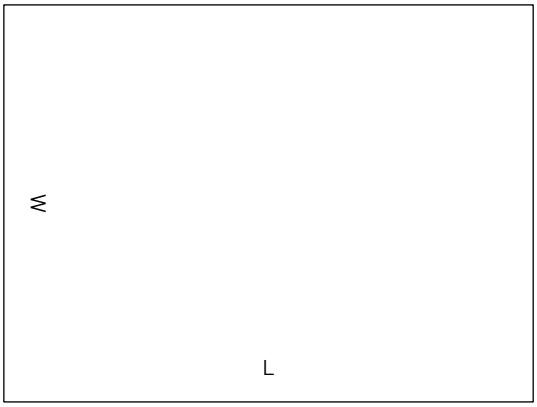

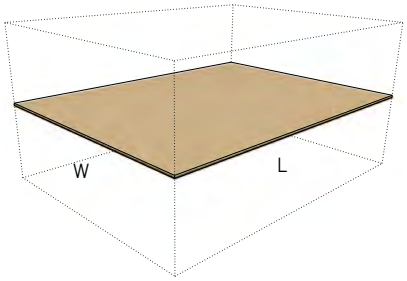

0902 M/A

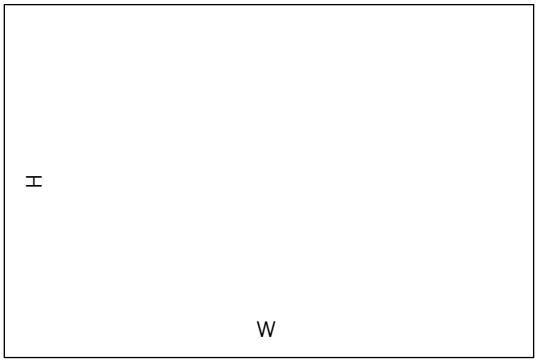

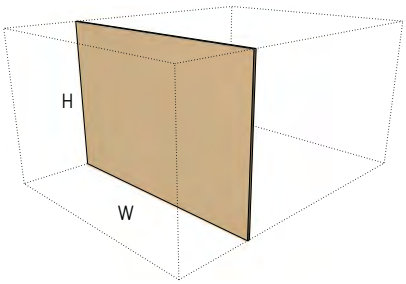

0903 M/A

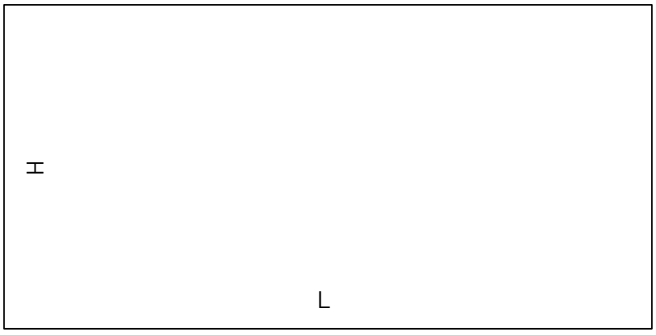

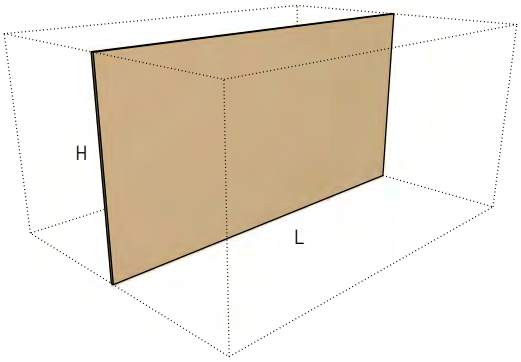

0904 M/A

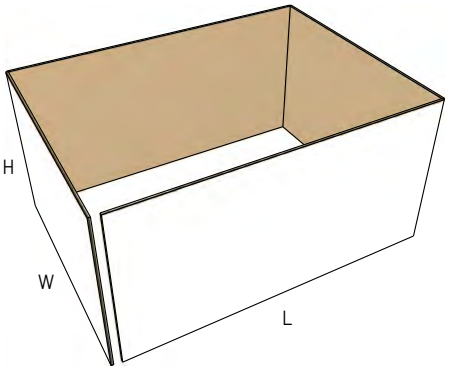

0905 M/A

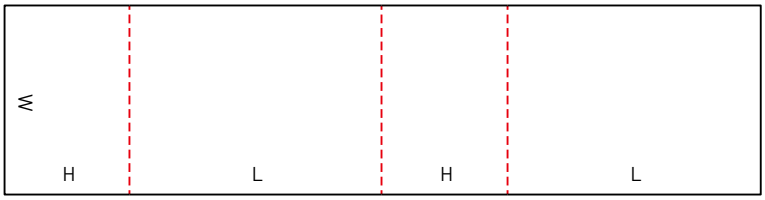

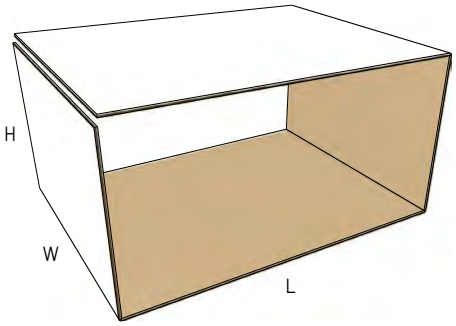

0906 M/A

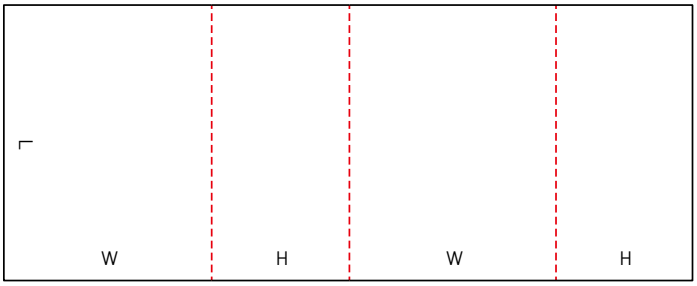

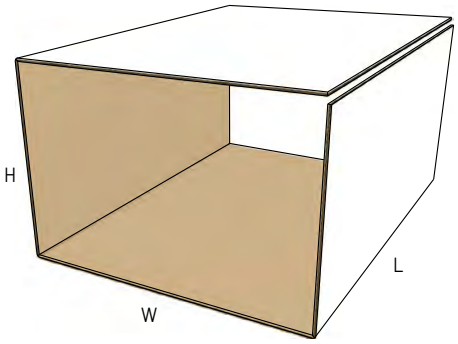

0907 M/A

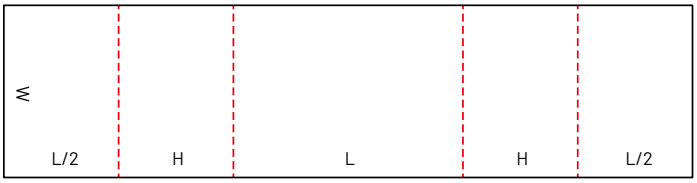

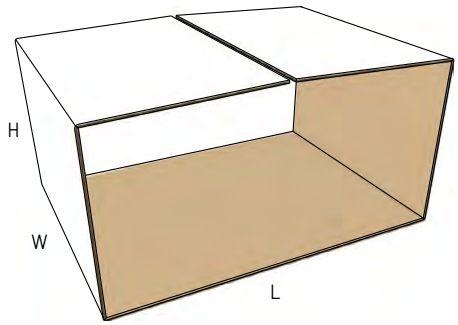

0908 M/A

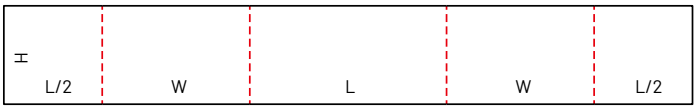

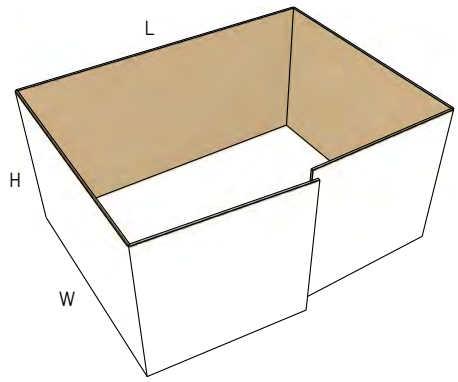

0909 M/A

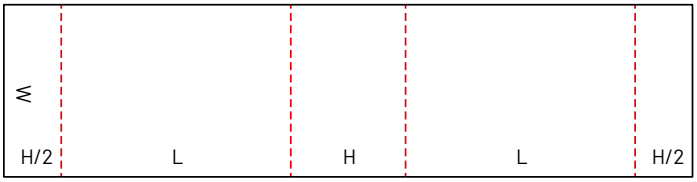

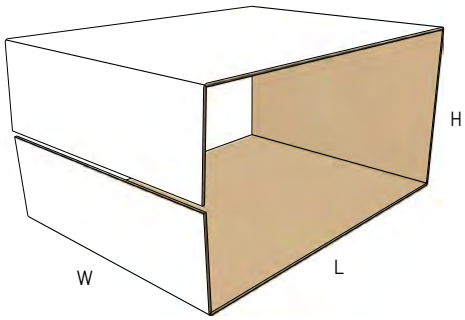

0910 M/A

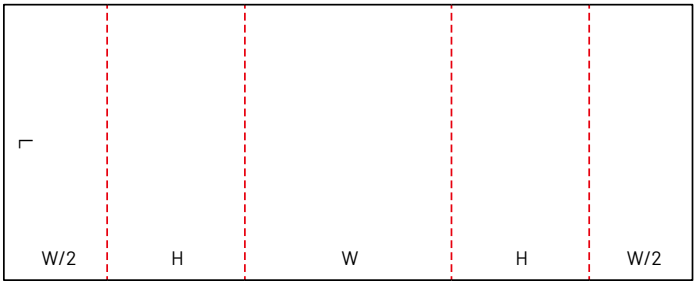

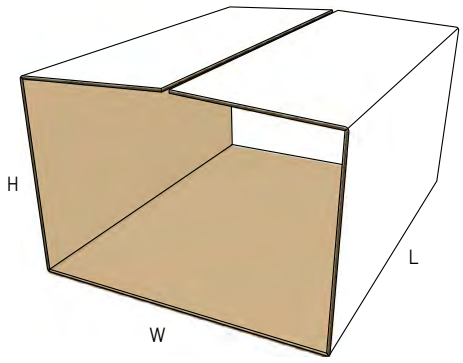

0911 M/A

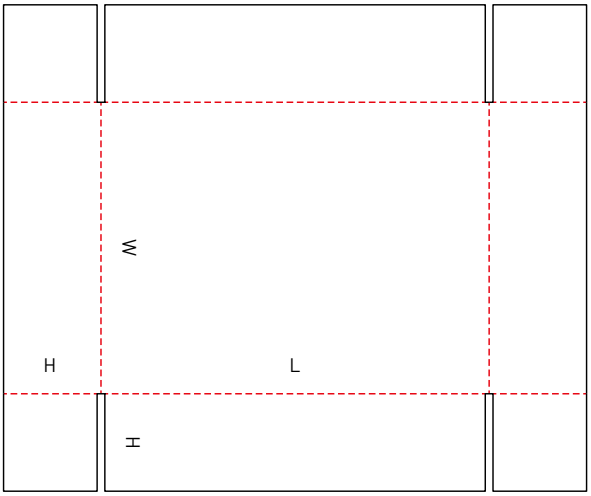

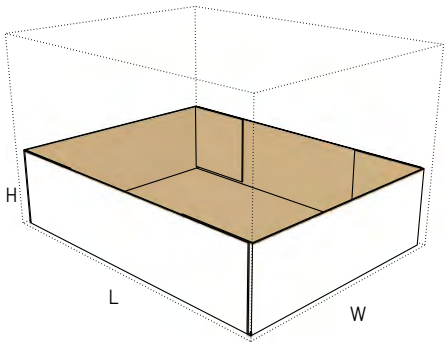

0912 M/A

NEW

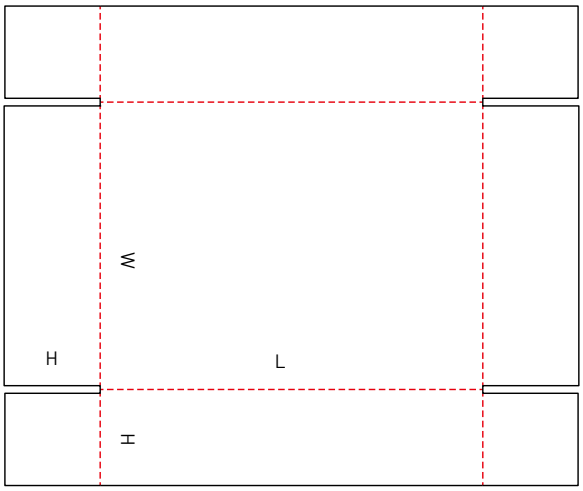

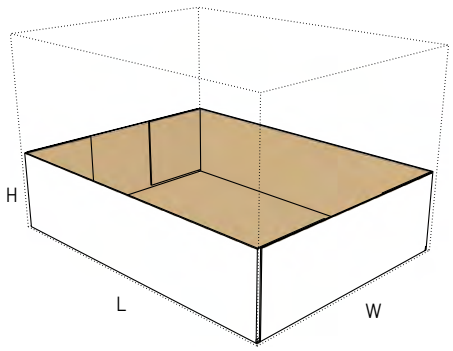

0913 M

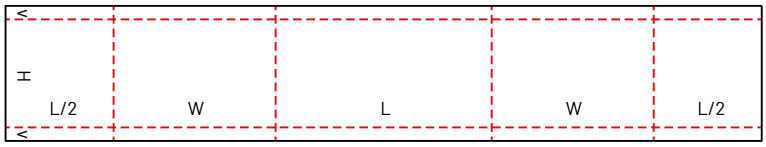

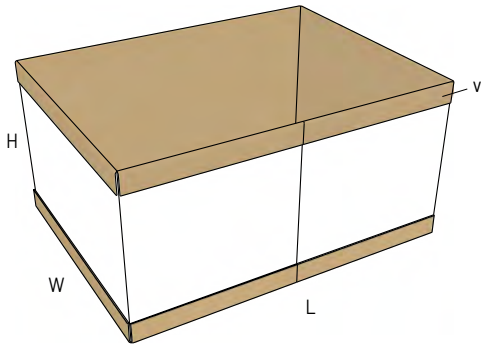

0914 M

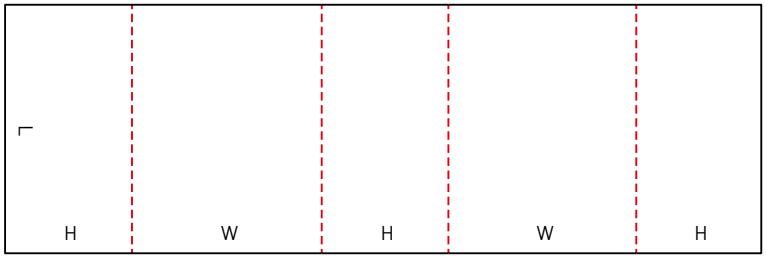

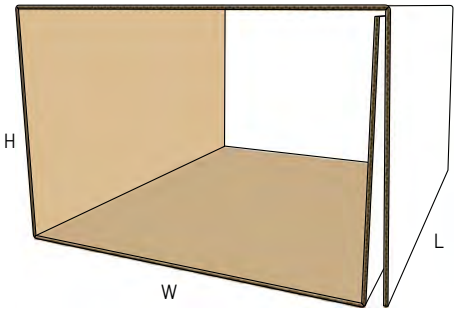

0920 M

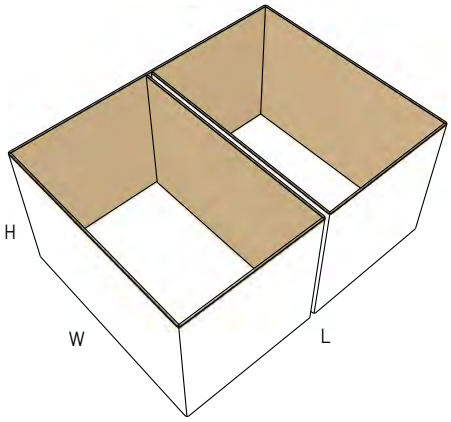

0921 M

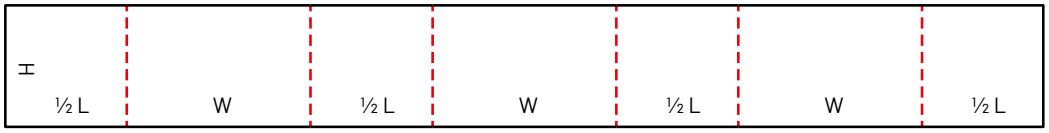

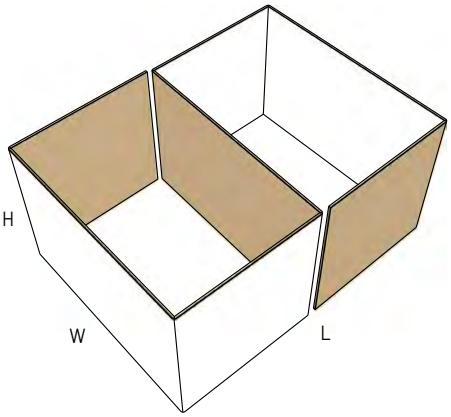

0929 M

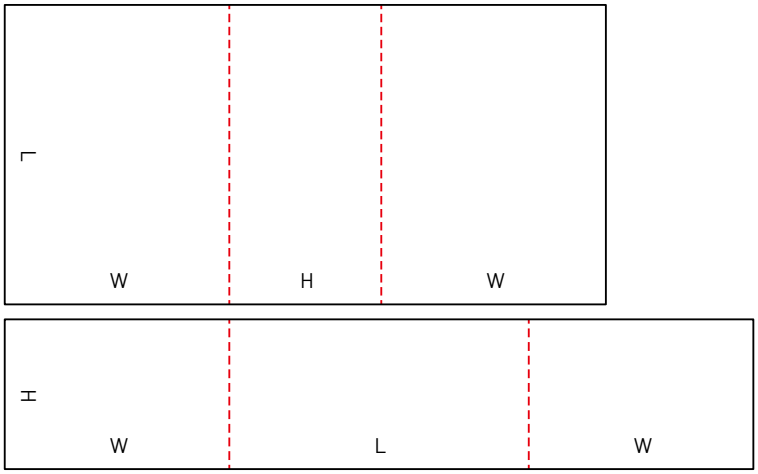

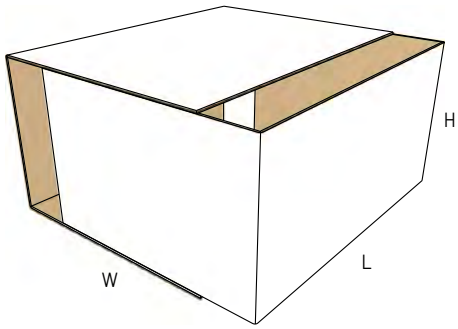

0930 M

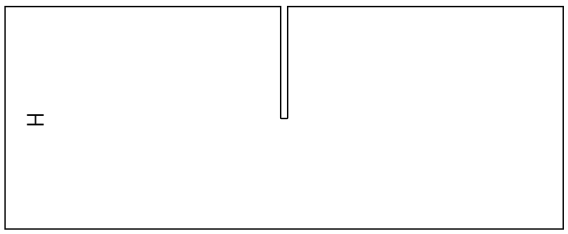

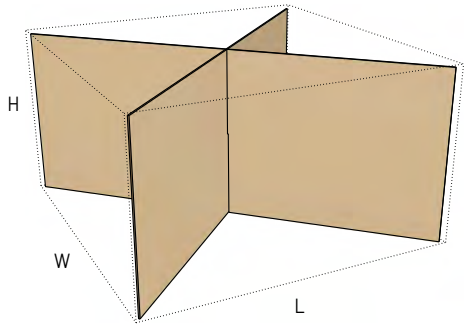

0931 M

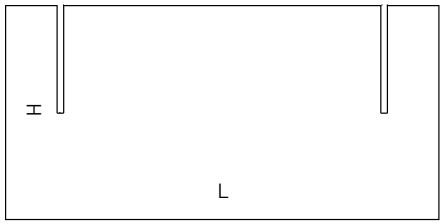

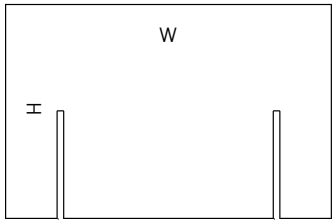

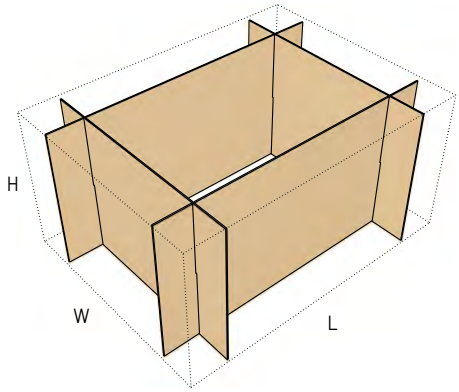

0932 M

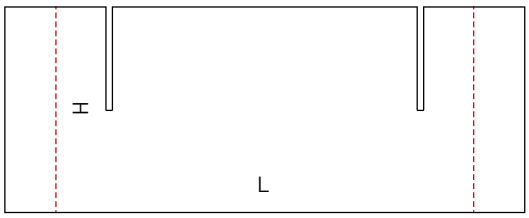

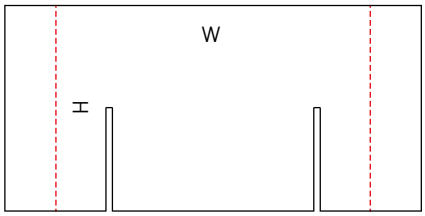

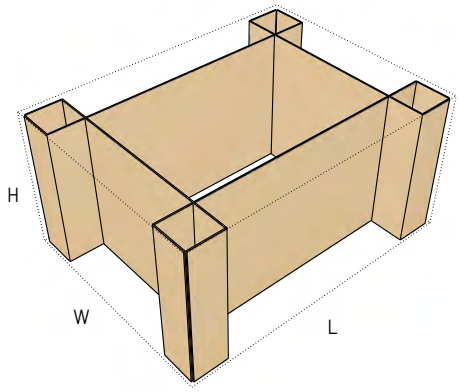

0933 M

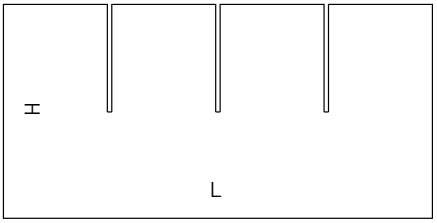

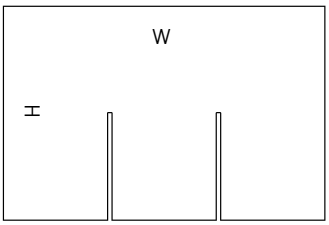

Number of cells
defined by user.

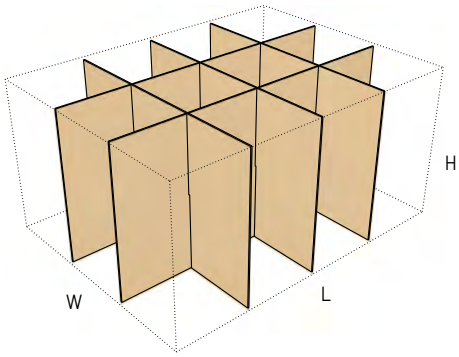

0934 M

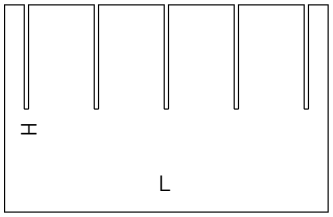

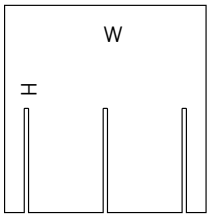

Number of cells
defined by user.

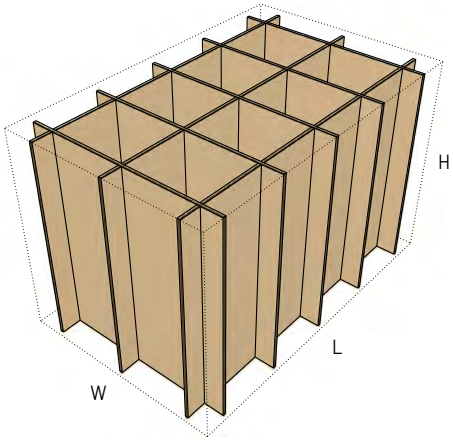

0935 M

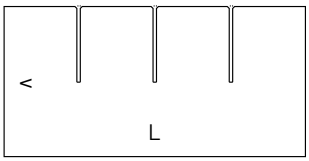

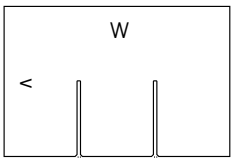

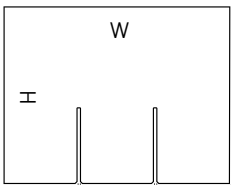

Number of cells
defined by user.

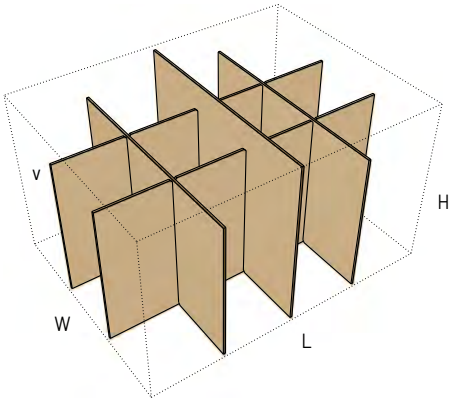

0936 M

NEW

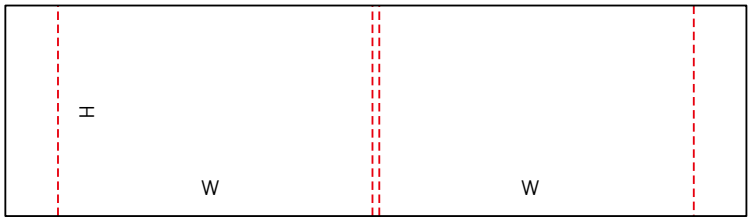

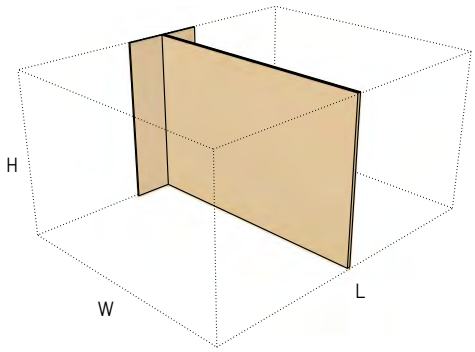

0937 M

NEW

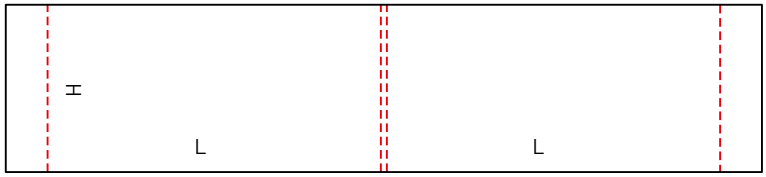

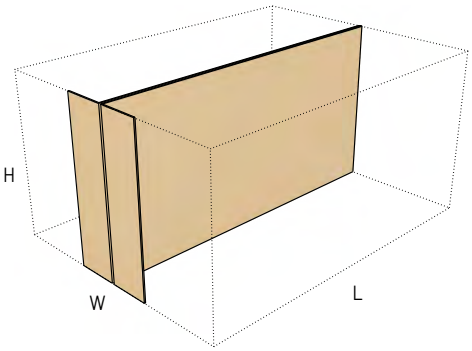

0938 M

NEW

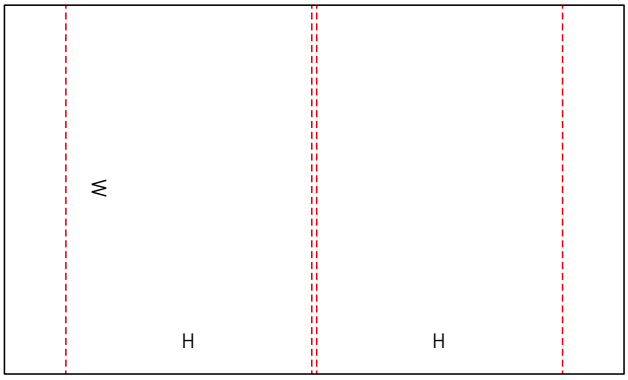

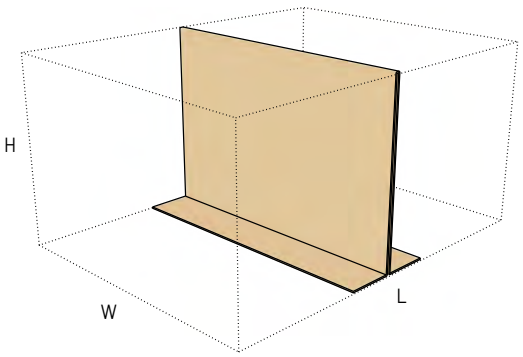

0939 M

NEW

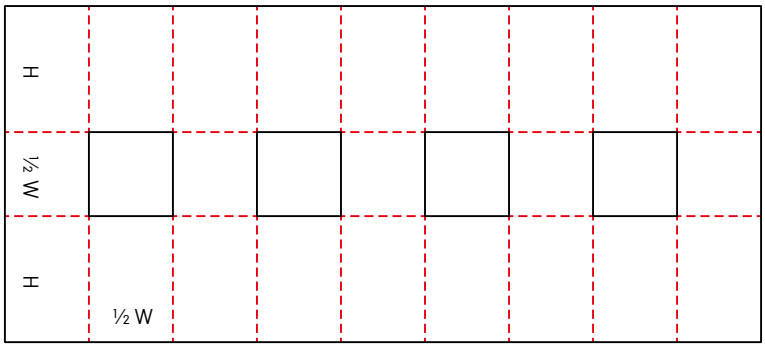

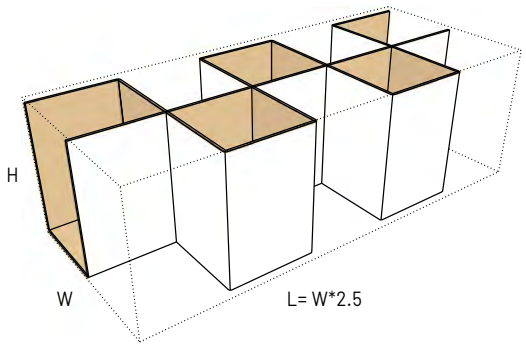

0940 M

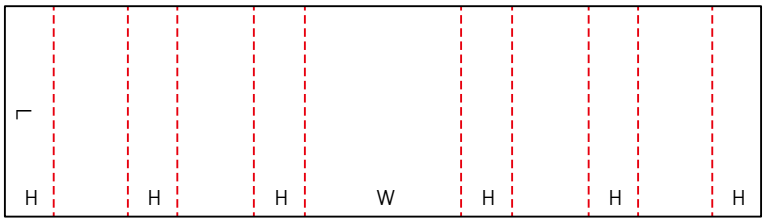

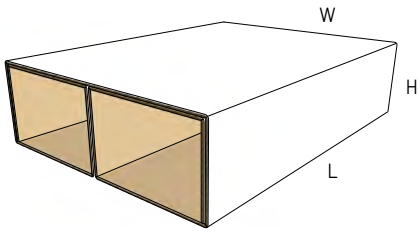

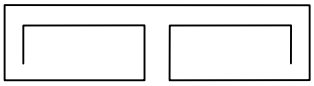

0941 M

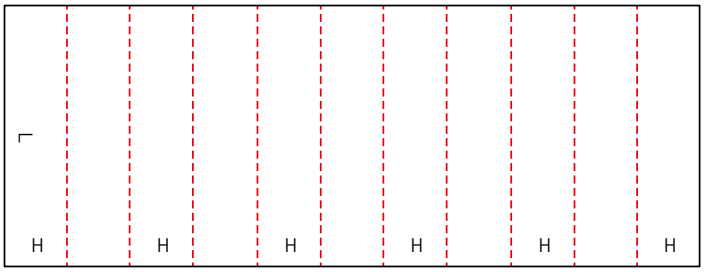

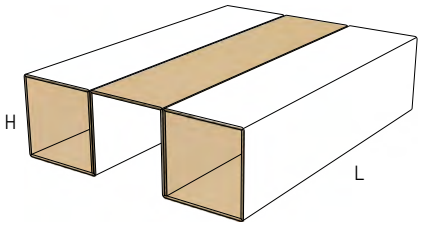

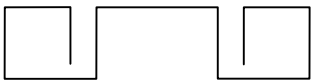

0942 M

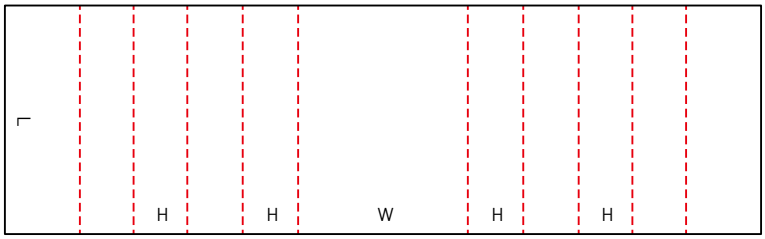

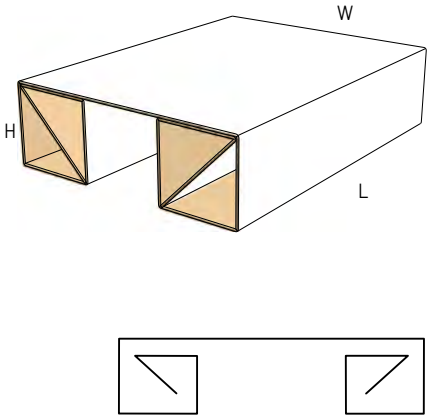

0943 M

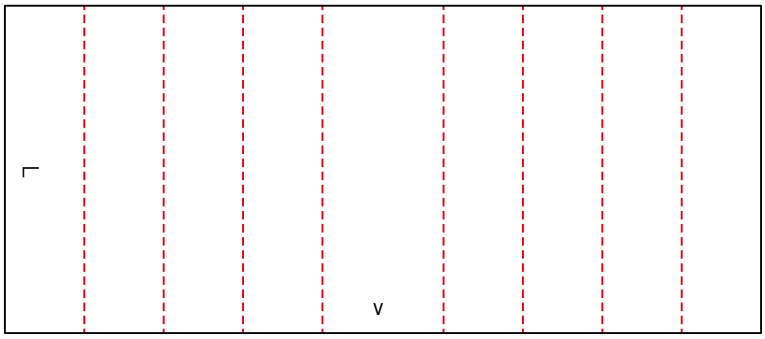

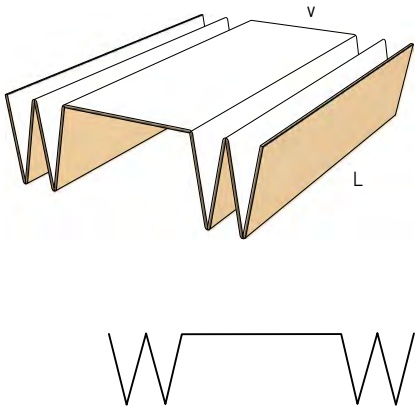

0944 M

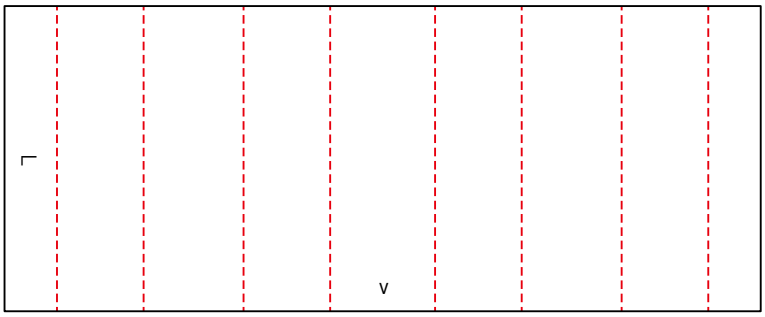

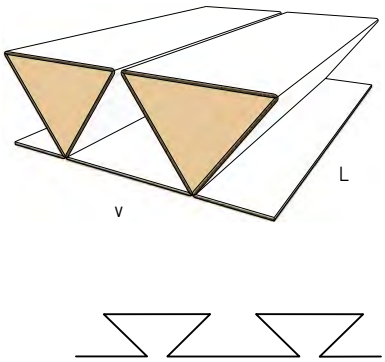

0945 M

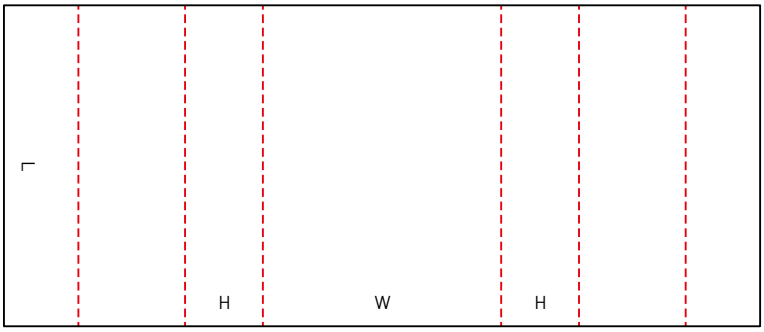

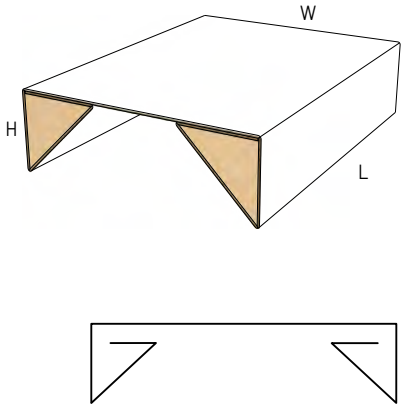

0946 M

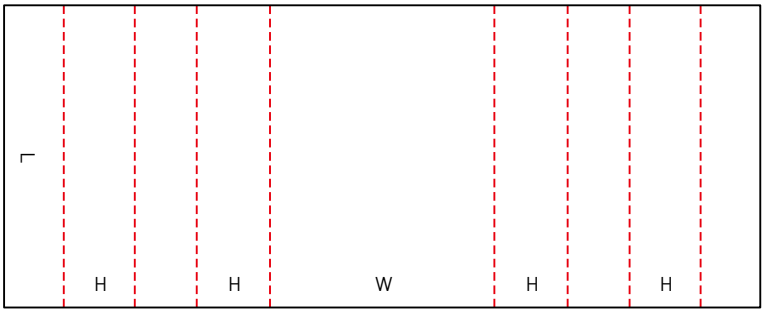

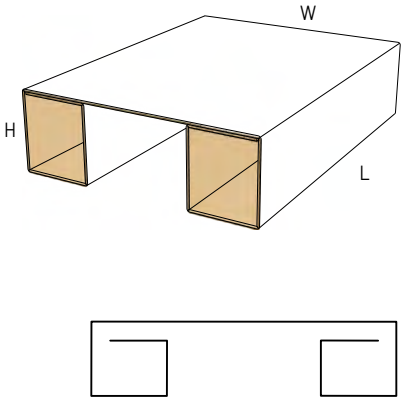

0947 M

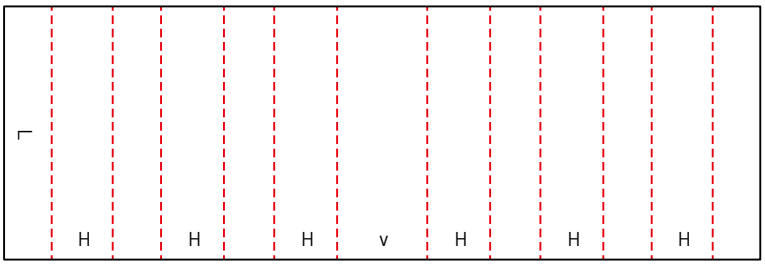

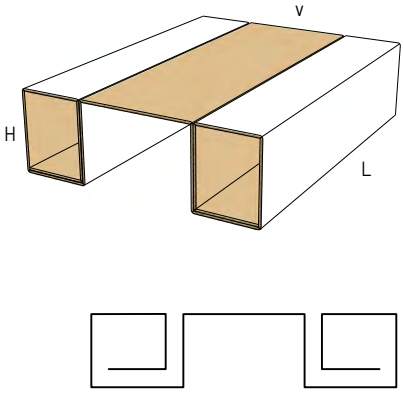

0948 M

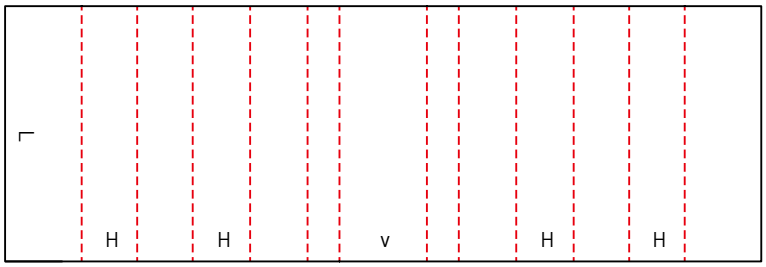

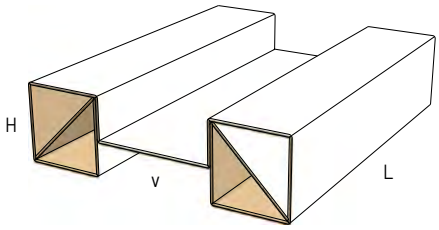

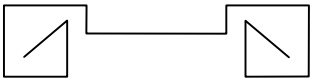

0949 M

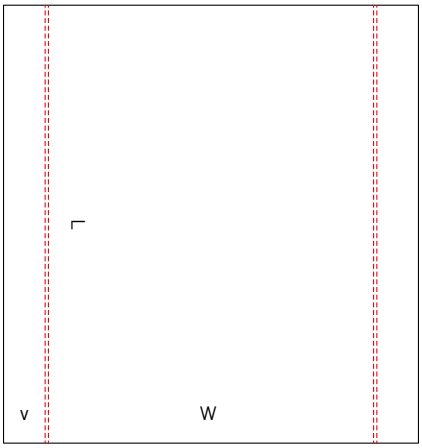

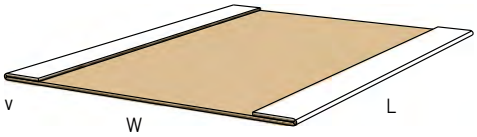

0950 M

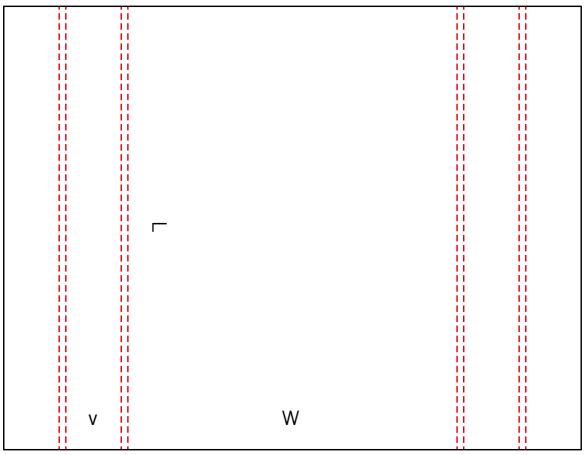

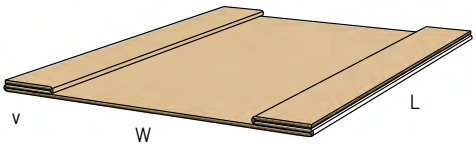

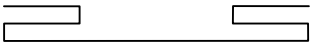

0951 M

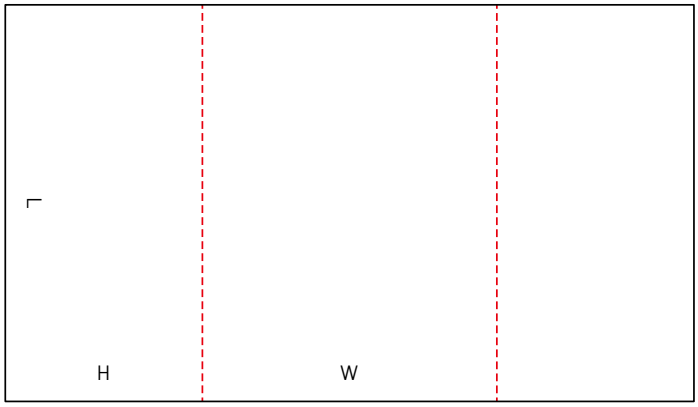

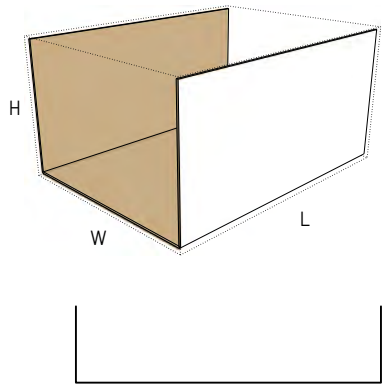

0952 M/A

NEW

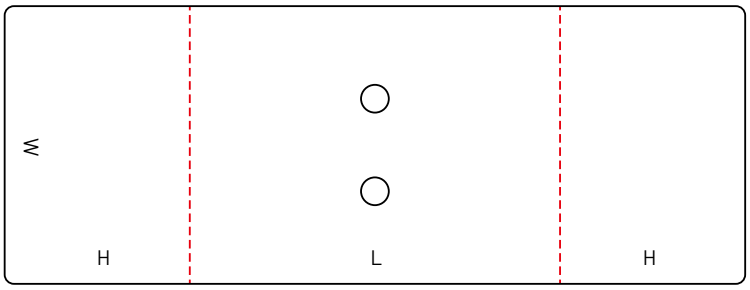

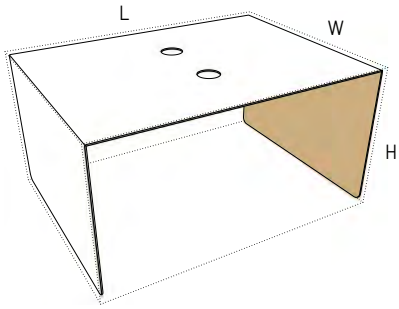

0953 M/A

NEW

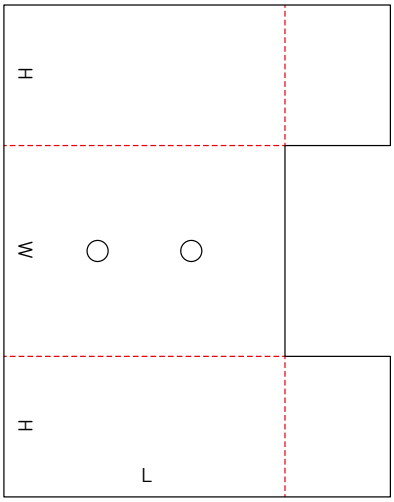

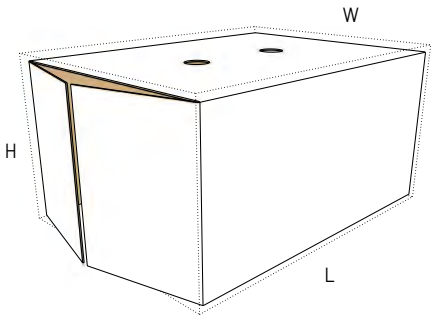

0954 M

NEW

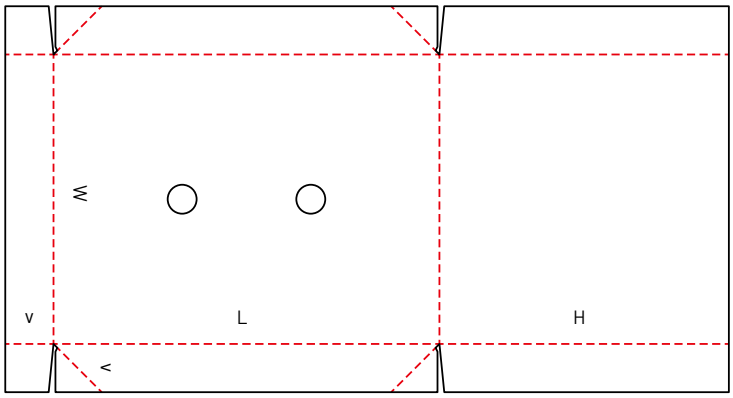

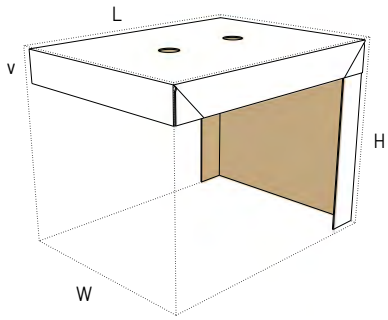

0955 M

NEW

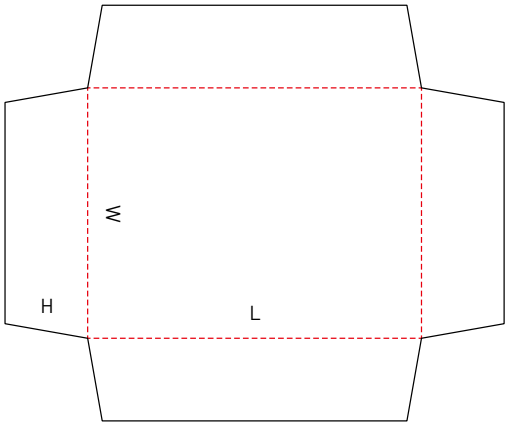

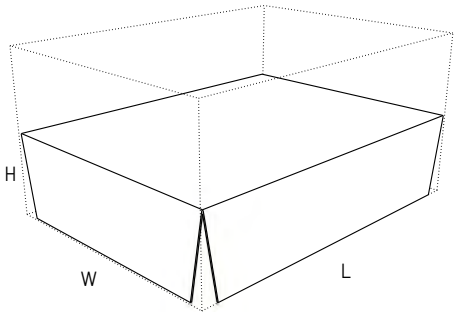

0960 M

NEW

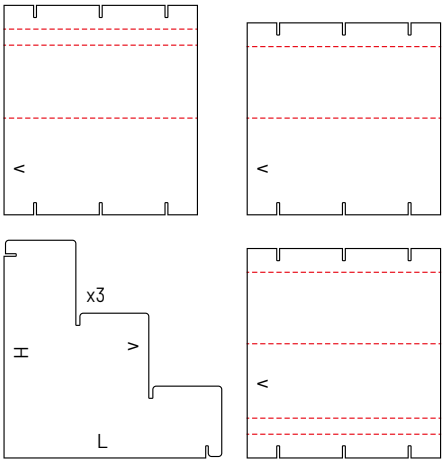

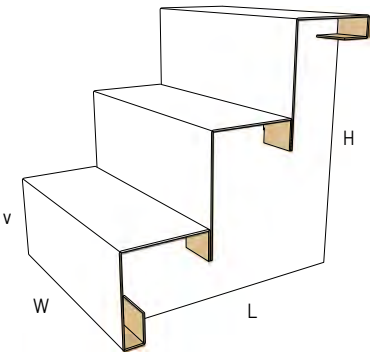

0965 M

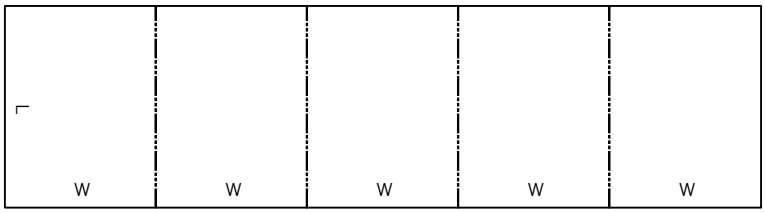

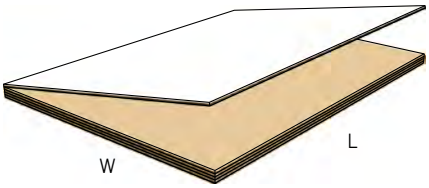

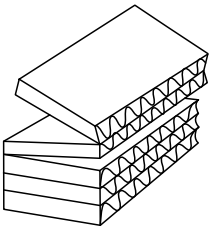

0966 M

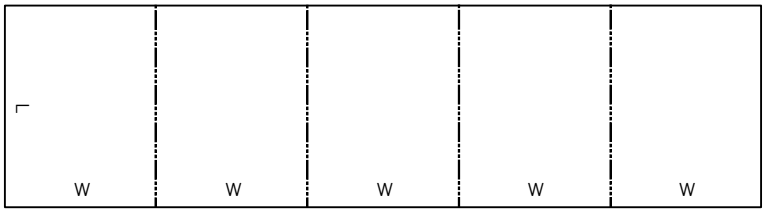

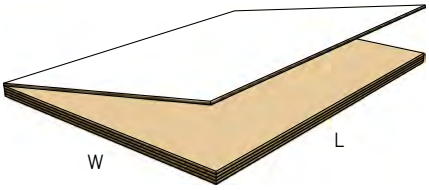

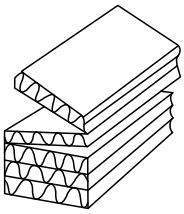

0967 M

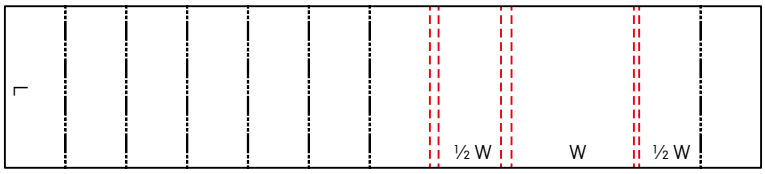

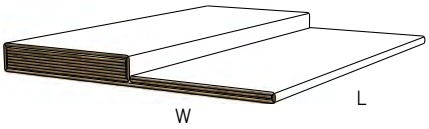

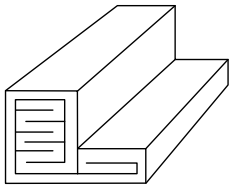

0970 M

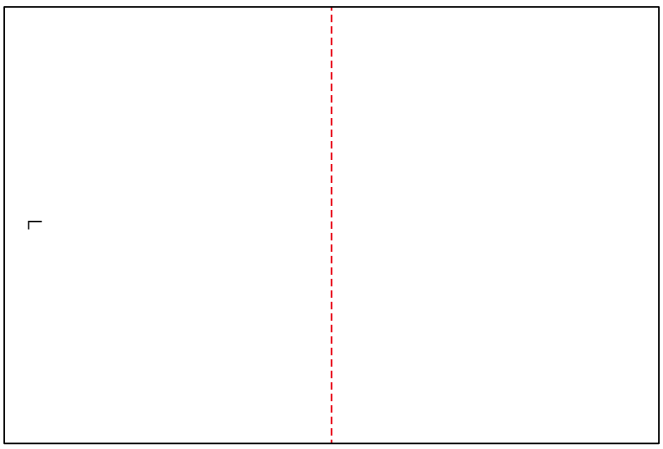

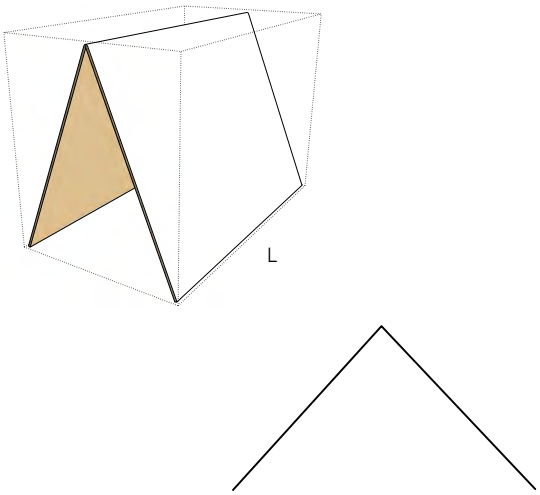

0971 M

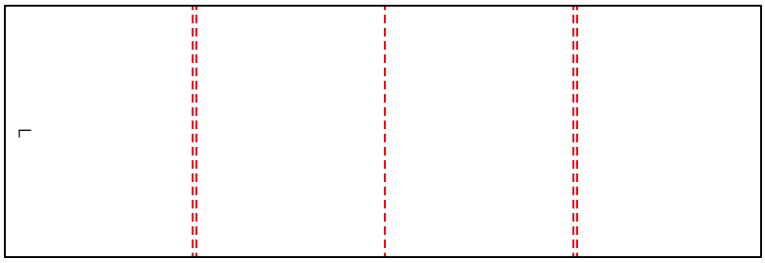

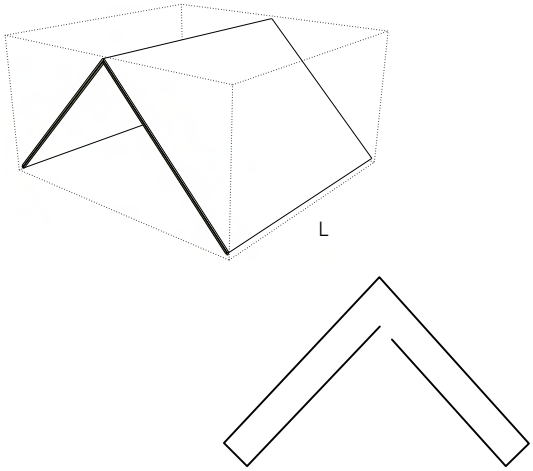

0972 M

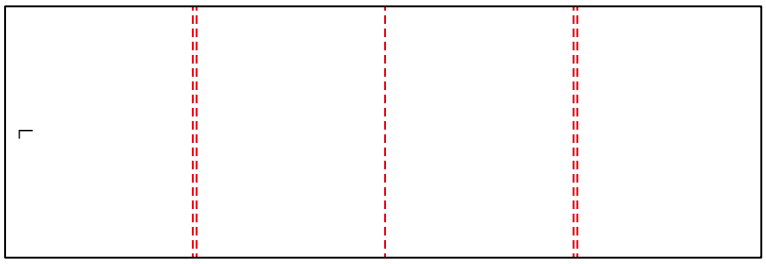

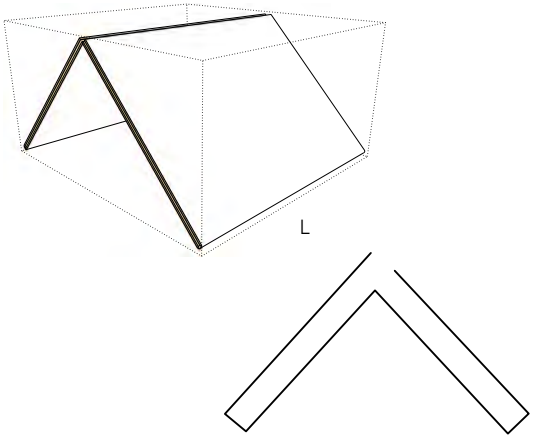

0973 M

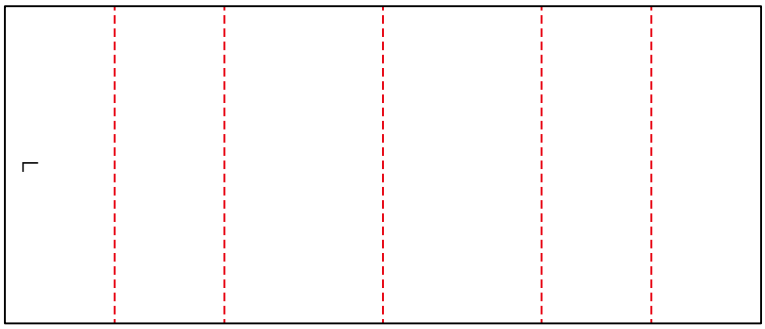

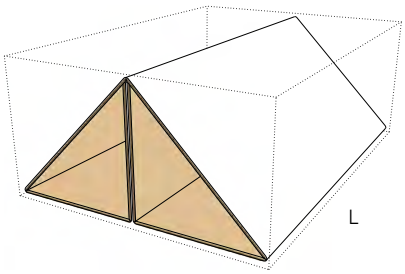

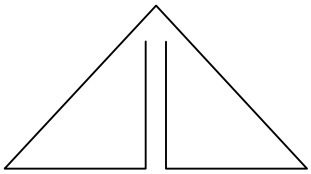

0974 M

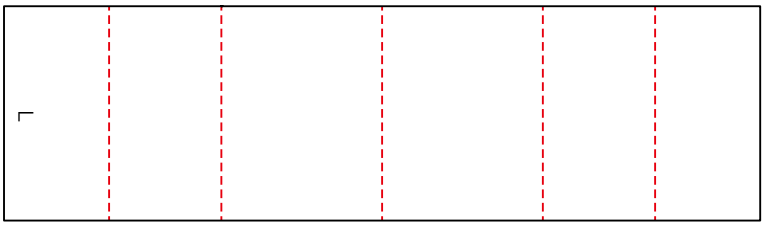

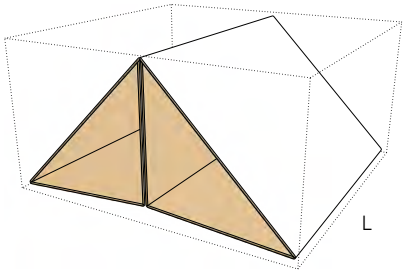

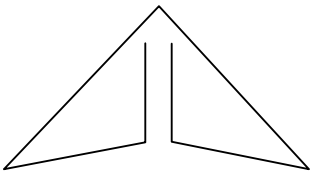

0975 M

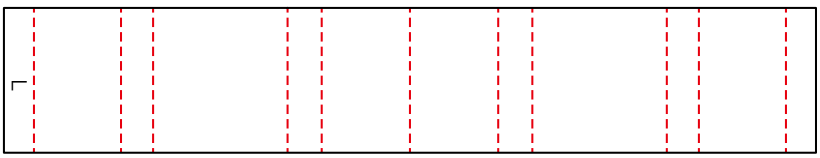

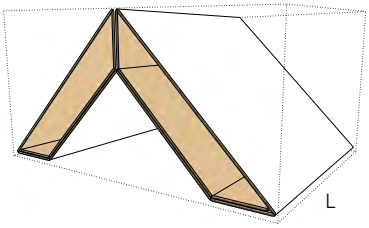

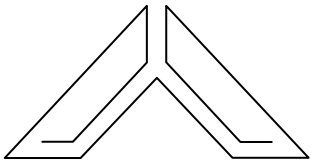

0976 M

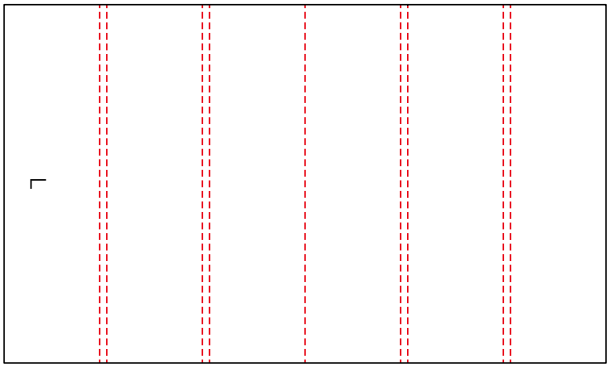

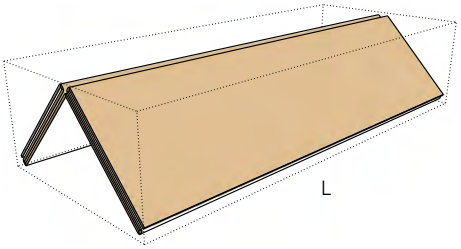

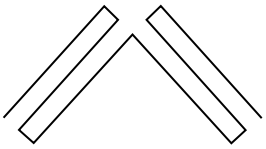

PLASPER
AMBALAJ

+90 541 577 09 77

satis@plasperambalaj.com

Kavak Organize Sanayi Bölgesi 4. Cadde
Kavak – Samsun / TÜRKİYE

plasperambalaj.com